SETON HALL PREPARATORY SCHOOL PROPOSED DIGITAL LAB AND ENTRY ADDITION PRELIMINARY AND FINAL SITE PLAN APPROVAL

120 NORTHFIELD AVENUE
ZONE: R-6 SINGLE FAMILY RESIDENTIAL DISTRICT
BLOCK: 59.04 – LOT 1.01
TOWNSHIP OF WEST ORANGE
ESSEX COUNTY, NEW JERSEY

ZONING ANALYSIS TABLE

ZONE: R-6

PROPOSED USE: PRIVATE HIGH SCHOOL

REFERENCE: TOWNSHIP OF WEST ORANGE MUNICIPAL CODE, LATEST EDITION

	PER MUNICIPAL CODE	EXISTING	PROPOSED
PERMITTED USES	ONE FAMILY, DETACHED DWELLING; WATER RESERVOIR, WELL TOWER, FILTER BED; FEDERAL, STATE, COUNTY OR TOWNSHIP BUILDING; GOLF COURSE AND GOLF CLUB HOUSE; FARM, NURSERY, GREENHOUSE AND SIMILAR USES; HOSPITAL.	PRIVATE SCHOOL	PRIVATE SCHOOL
PERMITTED CONDITIONAL USES	COMMERCIAL RECREATION; PUBLIC SCHOOL; PRIVATE SCHOOL; LIBRARY; MUSEUM; PARK OR PLAYGROUND; PUBLIC UTILITY BUILDING OR STRUCTURE; TELEPHONE EXCHANGE; PRIVATE CLUB, OTHER THAN A GOLF CLUB; HOUSE OF WORSHIP	PRIVATE SCHOOL	PRIVATE SCHOOL
MINIMUM LOT AREA	6,000 SQUARE FEET	444,580 SQUARE FEET	444,580 SQUARE FEET
MINIMUM LOT WIDTH	60 FEET	471.9 FEET	471.9 FEET
MINIMUM LOT DEPTH	NO REQUIREMENT	931.5 FEET	932.5 FEET
MAXIMUM LOT COVERAGE	45%	40.5%	40.5%
SETBACKS			
MIN. FRONT	30 FEET	20.7 FEET	20.7 FEET
MIN. SIDE	10 FEET / 8 FEET	155.0 FEET / 20.6 FEET	155.0 FEET / 20.6 FEET
MIN. REAR	30 FEET	532.0 FEET	532.0 FEET
BUILDING REQUIREMENTS			
MAXIMUM BUILDING HEIGHT (STORIES/FT)	2-1/2 STORY/35 FT	4 STORIES / 70 FT*	4 STORIES / 70 FEET**
MAXIMUM BUILDING COVERAGE	35%	16.1% (71,475 SF)	16.4% (72,925 SF)
PARKING REQUIREMENTS			
OFF-STREET PARKING REQUIREMENTS	1,042 PARKING STALLS	124 SPACES (5 OF WHICH ARE ADA STALLS)*	124 SPACES (5 OF WHICH ARE ADA STALLS)**
TABLE KEY			
	N/A	NOT APPLICABLE	
	*	EXISTING NON-CONFORMING VARIANCE	
	**	VARIANCE	

REFERENCE: 2021 MICROSOFT IMAGERY

0 250' 500' 1000'
SCALE: 1"=500'

SITE LOCATION MAP
1" = 500'

SUBJECT PROPERTY
200' RADIUS

ZONING MAP
N.T.S.

SUBJECT PROPERTY

PROJECT DESCRIPTION

THE PROJECT PROPOSES TO CONSTRUCT A NEW TWO-STORY 1,450 SF ADDITION TO THE EXISTING SETON HALL PREPARATORY SCHOOL. THE NEW ADDITION WILL HOUSE A TWO (2) DIGITAL CLASSROOMS AND A STORAGE ROOM. THE PROJECT ALSO PROPOSES NEW SIDEWALK AND BRICK PAVERS AND MINIMAL LANDSCAPING IMPROVEMENTS.

EXISTING PARKING CALCULATION

TOWNSHIP OF WEST ORANGE PARKING REQUIREMENT

1.1. AS PER 25-12.2(b) PUBLIC, PRIVATE, BUSINESS, OR VOCATIONAL SCHOOL:
- 1.1.1. 1 FOR EACH EMPLOYEE ON THE PREMISES AT THE SAME TIME DURING PEAK HOURS: 87 EMPLOYEES REQUIRE 87 STALLS
- 1.1.2. PLUS 1 FOR EACH 5 PUPILS IN THE 11TH AND 12TH GRADE: 432 PUPILS IN 11TH AND 12TH GRADE REQUIRE 87 PARKING STALLS
- 1.1.3. PLUS 1 PARKING SPACE FOR EACH 2 PUPILS OVER 18 YEARS OF AGE WHO ARE NOT IN THE 11TH AND 12TH GRADES: 0 PUPILS REQUIRE 0 STALLS
- 1.1.4. ADDITIONAL PARKING SPACES SHALL BE PROVIDED FOR ANY OTHER ACTIVITY AND USE ON THE PREMISES, SUCH AS AN ASSEMBLY HALL IN ACCORDANCE WITH THE PROVISIONS OF THIS ORDINANCE
  - 1.1.4.1. AUDITORIUM (754 SEATS; 1 STALL PER 3 SEATS) REQUIRES 252 PARKING STALLS
  - 1.1.4.2. GYMNASIUM (700 SEATS; 1 STALL PER 3 SEATS) REQUIRES 234 PARKING STALLS
  - 1.1.4.3. BLEACHERS (600 SEATS; 1 STALL PER 3 SEATS) REQUIRES 200 PARKING STALLS
  - 1.1.4.4. CAFETERIA (500 SEATS; 1 STALL PER 3 SEATS) REQUIRES 167 PARKING STALLS
  - 1.1.4.5. OFFICE SPACE (2,940 SF; REQUIRES 1 STALL PER 200 SF OF SPACE): REQUIRES 15 PARKING STALLS

1,042 PARKING STALLS REQUIRED IN EXISTING CONDITIONS

PROPOSED PARKING CALCULATION

THE PUPIL COUNT AND EMPLOYEE COUNT WILL REMAIN THE SAME FOR THE SCHOOL AFTER COMPLETION OF THE NEW ADDITION. AS SUCH, NO ADDITIONAL PARKING STALLS ARE REQUIRED FOR THE PROJECT SITE AS A RESULT OF THE NEW ADDITION.

REQUIRED APPROVALS

- ESSEX COUNTY PLANNING BOARD
- HUDSON-ESSEX-PASSAIC SOIL CONSERVATION DISTRICT
- TOWNSHIP OF WEST ORANGE ZONING BOARD

LIST OF VARIANCES

N.J.S.A. 40:55D-70.D.(2) FOR THE ALTERATION AND EXPANSION OF AN EXISTING NONCONFORMING CONDITIONAL USE.

INDEX OF DRAWINGS

DWG.	TITLE	PREPARED BY
SP-100.00	COVER SHEET	E2PM
SP-101.00	GENERAL NOTES AND MAPPING	E2PM
SP-101.10	200-FT PROPERTY OWNER'S LIST	E2PM
SP-102.00	OVERALL EXISTING CONDITIONS PLAN	E2PM
SP-102.10	EXISTING CONDITIONS AND DEMOLITION PLAN	E2PM
SP-103.00	OVERALL SITE PLAN	E2PM
SP-103.10	SITE PLAN	E2PM
SP-110.00	SOIL EROSION AND SEDIMENT CONTROL NOTES & DETAILS	E2PM
SP-111.00	CONSTRUCTION DETAILS	E2PM

TOWNSHIP OF WEST ORANGE

FOR APPROVAL BY THE TOWNSHIP OF WEST ORANGE:

CHAIRMAN OF THE ZONING BOARD — DATE

SECRETARY OF THE ZONING BOARD — DATE

TOWNSHIP ENGINEER — DATE

SCHEDULE OF REVISIONS

REV.	DATE	DESCRIPTION OF CHANGES	DRAWN BY	CHK. BY

OWNER
SETON HALL PREPARATORY SCHOOL
120 NORTHFIELD AVENUE
TOWNSHIP OF WEST ORANGE, NJ 07052

APPLICANT
SETON HALL PREPARATORY SCHOOL
120 NORTHFIELD AVENUE
TOWNSHIP OF WEST ORANGE, NJ 07052

E 2 PROJECT MANAGEMENT LLC

87 HIBERNIA AVENUE
ROCKAWAY, N.J. 07866
PHONE: (973) 299-5200
FAX: (973) 299-5059
www.E2PM.com

THIS DRAWING DOES NOT INCLUDE NECESSARY COMPONENTS FOR CONSTRUCTION SAFETY. ALL CONSTRUCTION MUST BE DONE IN COMPLIANCE WITH THE OCCUPATIONAL SAFETY AND HEALTH ACT OF 1970 AND ALL RULES AND REGULATIONS THERETO APPURTENANT. THIS DRAWING AND THE DESIGN FEATURES OR CONSTRUCTION DISCLOSED ARE PROPRIETARY TO E2 PROJECT MANAGEMENT LLC AND SHALL NOT BE REPRODUCED, ALTERED OR COPIED WITHOUT WRITTEN PERMISSION, SHALL NOT BE USED IN ANY MANNER DETRIMENTAL TO ITS INTEREST AND SHALL BE RETURNED UPON REQUEST.

N.J. ENGINEERING CERTIFICATE OF AUTHORIZATION No. 24GA28118200

I CERTIFY THAT THESE PLANS HAVE BEEN PREPARED UNDER MY SUPERVISION

STATE OF NEW JERSEY — CHARLES J. STEWART — No. GB35884 — LICENSED — PROFESSIONAL ENGINEER & LAND SURVEYOR

Digitally signed by Charles Stewart
Date: 2023.09.07 10:34:16 -04'00'

CHARLES J. STEWART, P.E., P.L.S.
NJ REGISTERED PROFESSIONAL ENGINEER LICENSE AND
NJ PROFESSIONAL LAND SURVEYOR LICENSE NO. 24GB035884

PROJECT NAME

SETON HALL PREPARATORY SCHOOL
PROPOSED DIGITAL LAB AND ENTRY

120 NORTHFIELD AVENUE
TOWNSHIP OF WEST ORANGE
ESSEX COUNTY, NEW JERSEY
TAX BLOCK 59.04, LOT 1.01

DRAWING TITLE

COVER SHEET

CHECKED BY: CJS	DRAWN BY: ENS
SCALE: AS SHOWN	SHEET NO:
PROJECT #: P-22-70-01	FIRST ISSUE: 9/06/2023

DRAWING NO.

SP-100.00

GENERAL NOTES

1. CONTRACTOR SHALL VERIFY THE LOCATION OF EXISTING UTILITIES IN THE FIELD PRIOR TO CONSTRUCTION. THIS SHALL INCLUDE EXCAVATING TEST PITS, IF NECESSARY. CONTRACTOR SHALL CALL FOR UTILITY MARK-OUT PRIOR TO ANY DEMOLITION OR CONSTRUCTION ACTIVITIES.
2. IT IS THE CONTRACTOR'S RESPONSIBILITY TO NOTIFY UTILITY "ONE-CALL" NUMBER 72 HOURS PRIOR TO ANY EXCAVATION ON THIS SITE. THE CONTRACTOR SHALL NOTIFY ALL LOCAL UTILITY AGENCIES TO MARK OUT UTILITIES.
3. ALL SITE WORK SHALL BE PERFORMED IN ACCORDANCE WITH THE REQUIREMENTS OF THE TOWNSHIP OF WEST ORANGE.
4. PRIOR TO THE START OF CONSTRUCTION ACTIVITIES, IT IS THE CONTRACTOR'S RESPONSIBILITY TO OBTAIN ALL REQUIRED PERMITS AND APPROVALS. NO CONSTRUCTION ACTIVITIES SHALL COMMENCE UNTIL THE CONTRACTOR HAS RECEIVED ALL PERMITTING APPROVALS AND REVIEWED ALL DOCUMENTATION AND PERMIT STIPULATIONS ISSUED BY THE GOVERNING PERMITTING AUTHORITIES.
5. CONNECTIONS TO EXISTING UTILITIES SHALL BE PERFORMED IN ACCORDANCE WITH THE REQUIREMENTS OF THE UTILITY COMPANY HAVING JURISDICTION.
6. CONTRACTOR SHALL NOTIFY THE OWNER AND ENGINEER OF FIELD CONDITIONS OR CONFLICTS THAT WOULD ADVERSELY IMPACT CONSTRUCTION AS PROPOSED ON THE PLANS.
7. CONTRACTOR SHALL TAKE PRECAUTIONS TO AVOID DAMAGE TO EXISTING IMPROVEMENTS AND VEGETATION INTENDED TO REMAIN.
8. ALL DIMENSIONS SHOWN ON THE PLANS SHALL BE FIELD VERIFIED BY THE CONTRACTOR PRIOR TO CONSTRUCTION. CONTRACTOR SHALL NOTIFY ENGINEER OF ANY DISCREPANCIES THAT MAY EXIST PRIOR TO PROCEEDING WITH THE CONSTRUCTION ACTIVITY FOR NECESSARY PLAN CHANGES. THE CONTRACTOR IS NOT ENTITLED TO COMPENSATION FOR WORK HAVING TO BE REDONE DUE TO DIMENSIONS OR GRADES SHOWN INCORRECTLY ON THESE PLANS IF SUCH NOTIFICATION HAS NOT BEEN GIVEN.
9. E2 PROJECT MANAGEMENT LLC ASSUMES NO RESPONSIBILITY FOR THE METHODS, TECHNIQUES OR PROCEDURES OF CONSTRUCTION, FOR SAFETY MEASURES OR PRECAUTIONS RELATED TO CONSTRUCTION, OR ANY FAILURE TO COMPLY WITH APPLICABLE LAWS, REGULATIONS, ORDINANCES OR CODES.
10. ANY STRUCTURES TO BE REMOVED SHALL HAVE EXCAVATIONS BACKFILLED WITH STRUCTURAL FILL AND PROPERLY COMPACTED, AS PER PROJECT SPECIFICATIONS.
11. ANY DISTURBED AREA THAT WILL BE LEFT EXPOSED FOR MORE THAN THIRTY (30) DAYS AND NOT SUBJECT TO CONSTRUCTION TRAFFIC SHALL IMMEDIATELY RECEIVE A TEMPORARY SEEDING. IF THE SEASON PROHIBITS TEMPORARY SEEDING, THE DISTURBED AREA WILL BE MULCHED WITH STRAW OR THEN HAY AND TACKED IN ACCORDANCE WITH THE NEW JERSEY STANDARDS. SEE SOIL EROSION AND SEDIMENT CONTROL NOTES FOR SEEDING SPECIFICATIONS.
12. ALL CONSTRUCTION SHOW HEREIN SHALL CONFORM TO MUNICIPAL/COUNTY STANDARD CONSTRUCTION DETAILS AND SPECIFICATIONS AND N.J. DEPT. OF TRANSPORTATION STANDARD SPECIFICATIONS FOR ROAD AND BRIDGE CONSTRUCTION, AS AMENDED, UNLESS SPECIFICALLY SHOWN OTHERWISE HEREIN. IN CASE OF CONFLICT, THE MORE RESTRICTIVE SHALL GOVERN. CONTRACTOR SHALL NOTIFY DESIGN ENGINEER OF ANY QUESTIONS REGARDING CONFLICTS.
13. HANDICAPPED RAMPS AND CURB CUTS WILL BE PROVIDED AT ALL INTERSECTIONS AND PEDESTRIAN CROSSINGS, AS PER DETAILS.
14. ANY DAMAGE TO THE RIGHT-OF-WAY MUST BE REPAIRED/INSTALLED TO EQUAL STANDARDS.
15. PRIOR TO THE COMMENCEMENT OF ANY SITE WORK, THE APPLICANT MUST SCHEDULE A PRE-CONSTRUCTION MEETING WITH THE APPROPRIATE GOVERNING AGENCY.
16. ALL TRAFFIC SIGNS AND STRIPING SHALL BE IN ACCORDANCE WITH THE MANUAL ON UNIFORM TRAFFIC CONTROL DEVICES FOR STREETS AND HIGHWAYS.

STRUCTURAL FILL AND BACKFILL

[COORDINATE ALL EARTHWORK WITH GEOTECHNICAL REPORT]

IMPORT/ON-SITE STRUCTURAL FILL MATERIAL:
SOILS PLACED AS STRUCTURAL FILL MATERIAL SHOULD CONSIST OF WELL GRADED SAND OR GRAVEL WITH A MAXIMUM PARTICLE SIZE OF THREE INCHES IN DIAMETER AND LESS THAN 15 PERCENT OF MATERIAL PASSING THE NUMBER 200 SIEVE. THESE MATERIALS SHOULD BE FREE OF OBJECTIONABLE DEBRIS (CLAY CLUMPS, ORGANIC AND/OR DELETERIOUS MATERIAL, ETC.) AND WITHIN MOISTURE CONTENTS SUITABLE FOR COMPACTION. ALTERNATIVE SOIL TYPES WITH HIGHER PERCENTAGES OF SILT AND CLAY MAY BE CONSIDERED, PROVIDED THAT THE CONTRACTOR IS ABLE TO ACHIEVE PROPER COMPACTION AND MAINTAIN SUITABLE SUBGRADE ONCE THE MATERIAL IS PLACED. FINE-GRAINED SOILS AND/OR GRANULAR SOILS WITH HIGHER PERCENTAGES OF SILT AND CLAY ARE EXTREMELY MOISTURE SENSITIVE AND WILL ONLY BE SUITABLE FOR REUSE AS STRUCTURAL FILL MATERIAL DURING IDEAL WEATHER CONDITIONS. MATERIALS WETTED BEYOND THE OPTIMUM MOISTURE CONTENT; CONTAIN OVERSIZED ROCK OR DEBRIS; AND/OR CONTAIN INCREASED AMOUNTS OF OBJECTIONABLE DEBRIS WILL NOT BE SUITABLE FOR REUSE AS STRUCTURAL FILL MATERIAL WITHOUT SPECIAL HANDLING. AS SUCH, THE CONTRACTOR SHOULD BE RESPONSIBLE FOR IMPORTING STRUCTURAL FILL MATERIAL AND/OR PROCESSING ON-SITE SOILS AS REQUIRED SO THAT THESE MATERIALS ARE SUITABLE FOR STRUCTURAL FILL PLACEMENT.

IF ENCOUNTERED COBBLES/BOULDERS, EXCAVATED ROCK AND/OR OVERSIZED DEBRIS GREATER THAN THREE INCHES IN DIAMETER WILL NEED TO BE SEPARATED FROM ON-SITE SOILS TO BE PLACED AS STRUCTURAL FILL. APPROVED MATERIAL BETWEEN THREE TO 12 INCHES IN DIAMETER MAY BE CRUSHED OR INDIVIDUALLY PLACED IN FILL LAYERS DEEPER THAN TWO FEET BELOW PROPOSED SUBGRADE LEVELS. CARE MUST BE TAKEN TO INDIVIDUALLY SEAT ANY LARGE PARTICLES AND TO COMPACT SOIL AROUND LARGE PARTICLES WITH HAND OPERATED EQUIPMENT TO MINIMIZE THE RISK OF VOID FORMATION. THE LARGER MATERIAL SHOULD NOT BE PLACED NEAR AREAS OF THE PROPOSED UTILITY OR PLANNED EXCAVATION. BOULDERS LARGER THAN APPROXIMATELY 12 INCHES ARE NOT EXPECTED TO BE ADEQUATE FOR USE AS FILL OR BACKFILL AND SHOULD BE REMOVED FROM THE SITE OR CRUSHED TO AN ADEQUATE SIZE.

COMPACTION AND PLACEMENT REQUIREMENTS:
STRUCTURAL FILL AND BACKFILL SHOULD BE PLACED IN MAXIMUM 12 INCH LOOSE LIFTS AND COMPACTED TO 95 PERCENT OF THE MAXIMUM DRY DENSITY WITHIN A TARGETED TWO PERCENT OF THE OPTIMUM MOISTURE CONTENT AS DETERMINED BY ASTM D 1557 (MODIFIED PROCTOR). FILL MATERIAL COMPACTED WITH RELATIVELY LIGHT HAND HELD EQUIPMENT MAY NEED TO BE PLACED IN THINNER LIFTS.

STRUCTURAL FILL TESTING:
BEFORE FILLING OPERATIONS BEGIN, REPRESENTATIVE SAMPLES OF EACH PROPOSED FILL MATERIAL (ON-SITE AND IMPORTED) SHOULD BE COLLECTED. THE SAMPLES SHOULD BE TESTED TO DETERMINE THE MAXIMUM DRY DENSITY, OPTIMUM MOISTURE CONTENT, NATURAL MOISTURE CONTENT, GRADATION, AND PLASTICITY OF THE SOIL. THESE TESTS ARE NEEDED FOR QUALITY CONTROL DURING COMPACTION AND ALSO TO DETERMINE IF THE FILL MATERIAL IS ACCEPTABLE. THE PLACEMENT OF ALL FILL AND BACKFILL SHOULD BE MONITORED BY DYNAMIC EARTH'S GEOTECHNICAL ENGINEER OR TECHNICIAN TO ENSURE THAT THE SPECIFIED MATERIAL AND LIFT THICKNESSES ARE PROPERLY INSTALLED. A SUFFICIENT NUMBER OF IN-PLACE DENSITY TESTS SHOULD BE PERFORMED DURING FILL PLACEMENT TO ENSURE THAT THE SPECIFIED COMPACTION IS ACHIEVED THROUGHOUT THE HEIGHT OF THE FILL OR BACKFILL.

STORMWATER AND GROUNDWATER MANAGEMENT DURING SOIL EXCAVATION

1. THE CONTRACTOR SHALL PREPARE AND IMPLEMENT A STORMWATER AND GROUNDWATER MANAGEMENT AND CONTROL PLAN TO MANAGE SURFACE WATER AND GROUNDWATER. THE CONTRACTOR SHALL IDENTIFY ALL REQUIRED PERMITS ON THE CONTRACTOR'S PROJECT SCHEDULE ALLOWING ADEQUATE TIME FOR SECURING ALL REQUIRED PERMITS IN TIME FOR CONSTRUCTION.
2. THE CONTRACTOR'S PLAN SHALL SPECIFY METHODS AND EQUIPMENT FOR COLLECTING, PUMPING, TREATING AND DISPOSING OF LIQUIDS GENERATED DURING STORM WATER CONTROL AND DEWATERING; MEASURES TO PREVENT STORM WATER RUN-ON AND RUN-OFF; DEWATERING OF EXCAVATIONS; DECONTAMINATING PERSONNEL AND EQUIPMENT; AND STORING FUELS AND CHEMICALS. THE CONTRACTOR'S PLAN SHALL ALSO IDENTIFY THE APPLICABLE PERMITTING, MONITORING AND REPORTING REQUIREMENTS.

UTILITY NOTES

1. GAS, ELECTRIC, TELEPHONE, WATER AND CABLE LINES MAY BE INSTALLED BY THE RESPECTIVE UTILITY. THE EXACT LOCATION OF EACH MAIN SHALL BE COORDINATED BY THE OWNER/GENERAL CONTRACTOR AND SUBMITTED TO THE DESIGN ENGINEER FOR REVIEW PRIOR TO INSTALLATION.
2. ALL NEW UTILITIES SHALL BE INSTALLED UNDERGROUND, EXCEPT WHERE OTHERWISE NOTED.
3. REFER TO MEP DRAWINGS FOR UTILITY CONNECTIONS AT THE PROPOSED BUILDINGS. CONTRACTOR SHALL NOTIFY THE ENGINEER OF ANY DISCREPANCIES PRIOR TO CONSTRUCTION TO RESOLVE SAID DISCREPANCIES.
4. SANITARY SEWER MANHOLE RIMS AND CLEANOUTS SHALL BE RESET TO PROPOSED GRADE AS REQUIRED.
5. EXISTING WATER VALVE AND GAS VALVE BOXES SHALL BE RESET TO PROPOSED GRADE AS REQUIRED.
6. A MINIMUM HORIZONTAL DISTANCE OF 10 FT OR A MINIMUM OF 18" VERTICAL DISTANCE IS REQUIRED BETWEEN SANITARY SEWER AND POTABLE WATER PIPING. IF EITHER OF THESE DISTANCES CANNOT BE ACHIEVED, THE SANITARY SEWER SHALL BE ENCASED IN CONCRETE AT THE CONFLICT LOCATION.
7. ALL PROPOSED WATER MAINS, LOOPS, AND FIRE AND DOMESTIC WATER SERVICE SIZES SHOWN, WILL BE ADJUSTED AND SIZED BASED UPON THE RESULTS OF FIRE FLOW TESTS AND SUBSEQUENT DESIGN CALCULATIONS TO BE PROVIDED BY OTHERS.
8. ALL SITE CONCRETE, INCLUDING DRAINAGE STRUCTURES, SHALL BE AIR ENTRAINED WITH A COMPRESSIVE STRENGTH OF 4,500 PSI AT 28 DAYS.
9. ALL LOCATIONS WHERE UTILITIES WILL BE INSTALLED IN AREAS OF PROPOSED FILL, THE SOIL SHALL BE SUITABLE AND COMPACTED IN 1-FOOT LIFTS TO 95 PERCENT OF MAXIMUM DRY DENSITY AS DETERMINED BY ASTM-D-1557 (MODIFIED PROCTOR DENSITY). COMPACTION CERTIFICATIONS SHALL BE PROVIDED. THESE TESTS SHALL BE CONDUCTED BY A SOIL LAB PRIOR TO AND DURING THE INSTALLATION OF THE UTILITIES.
10. LOCATION AND LAYOUT OF GAS, ELECTRIC, AND TELECOMMUNICATION UTILITIES SHOWN ON THESE PLANS ARE SCHEMATIC IN NATURE. ACTUAL LOCATION AND LAYOUT OF THESE UTILITY SERVICES SHALL BE BE FINALIZED BY THE APPROPRIATE UTILITY PROVIDER.
11. ALL SEWER AND WATER UTILITIES SHALL BE CONSTRUCTED IN ACCORDANCE WITH THE GOVERNING UTILITY AUTHORITY'S RULES AND REGULATIONS.

LEGEND

x 123.45	EXISTING SPOT ELEVATION
TC 68.56	TOP OF CURB ELEVATION
TW 68.56	EXISTING TOP OF WALL ELEVATION
BW 68.56	EXISTING BOTTOM OF WALL ELEVATION
FFE 13.16	PROPOSED FINISHED FLOOR ELEVATION
+ 9.05	PROPOSED SPOT ELEVATION
	SITE PROPERTY LINE
	ADJACENT PROPERTY LINE
8	EXISTING CONTOUR
8	PROPOSED CONTOUR
G	GAS LINE
OH	OVERHEAD WIRE
E E E E	ELECTRIC LINE
W	WATER LINE
FW	FIRE WATER LINE
S S S	SANITARY SEWER
	STORM SEWER
T T T T	TELCO LINE
X X X X X X X	METAL FENCE
	CURB
	EDGE OF PAVEMENT
	EASEMENT
	RAIL ROAD
GV	GAS VALVE
WV	WATER VALVE
	HYDRANT
	MANHOLE
	STREET LIGHT
	SIGN
	ELECTRIC BOX/UTILITY BOX
	UTILITY POLE
	STORM CATCH BASIN OR INLET
	EXISTING CLEANOUT

FEMA FLOOD MAP
N.T.S.

FEMA FLOOD NOTES

1. THE PROJECT LIES OUTSIDE OF THE 1% AND 0.2% ANNUAL CHANCE FLOOD FLOOD PER FEMA FLOOD INSURANCE RATE MAP ESSEC COUNTY, NEW JERSEY PARCEL 94 OF 200 AND 113 OF 200 MAP NUMBERS 34013C0094F AND 34013C00113F, DATED JUNE 4, 2007.

WEST ORANGE UTILITIES

ELECTRIC & GAS

Public Service Electric & Gas Company
Manager - Corporate Properties
80 Park Plaza, T6B
Newark, NJ 07102

WATER

New Jersey American Water Company
167 John F. Kennedy Parkway
Short Hills. NJ 07078

CABLE TV

Comcast Cablevision
800 Rahway Avenue
Union, NJ 07083

TELEPHONE

Verizon
1 Verizon Way
Basking Ridge, New Jersey 07920-1025

SEWER

Township of West Orange
Municipal Building
66 Main Street
West Orange, NJ 07052

SCHEDULE OF REVISIONS

REV.	DATE	DESCRIPTION OF CHANGES	DRAWN BY	CHK. BY

OWNER
SETON HALL PREPARATORY SCHOOL
120 NORTHFIELD AVENUE
TOWNSHIP OF WEST ORANGE, NJ 07052

APPLICANT
SETON HALL PREPARATORY SCHOOL
120 NORTHFIELD AVENUE
TOWNSHIP OF WEST ORANGE, NJ 07052

E 2 PROJECT MANAGEMENT LLC

87 HIBERNIA AVENUE
ROCKAWAY, N.J. 07866
PHONE: (973) 299-5200
FAX: (973) 299-5059
www.E2PM.com

THIS DRAWING DOES NOT INCLUDE NECESSARY COMPONENTS FOR CONSTRUCTION SAFETY. ALL CONSTRUCTION WORK SHALL BE PERFORMED IN ACCORDANCE WITH OSHA STANDARDS, THE ACT OF 1970 AND ALL RULES AND REGULATIONS THERETO APPURTENANT. THIS DRAWING AND THE DESIGN FEATURES OR CONSTRUCTION DISCLOSED ARE PROPRIETARY TO E2 PROJECT MANAGEMENT LLC AND SHALL NOT BE REPRODUCED, ALTERED OR COPIED WITHOUT WRITTEN PERMISSION, SHALL NOT BE USED IN ANY MANNER DETRIMENTAL TO ITS INTEREST AND SHALL BE RETURNED UPON REQUEST.

N.J. ENGINEERING CERTIFICATE OF AUTHORIZATION No. 24GA28118200

I CERTIFY THAT THESE PLANS HAVE BEEN PREPARED UNDER MY SUPERVISION

STATE OF NEW JERSEY · CHARLES J. STEWART · No. GB35884 · LICENSED · PROFESSIONAL ENGINEER & LAND SURVEYOR

Digitally signed by Charles Stewart
Date: 2023.09.07 10:34:53 -04'00'

CHARLES J. STEWART, P.E., P.L.S.
NJ REGISTERED PROFESSIONAL ENGINEER LICENSE AND
NJ PROFESSIONAL LAND SURVEYOR LICENSE NO. 24GB035884

PROJECT NAME

SETON HALL PREPARATORY SCHOOL
PROPOSED DIGITAL LAB AND ENTRY

120 NORTHFIELD AVENUE
TOWNSHIP OF WEST ORANGE
ESSEX COUNTY, NEW JERSEY
TAX BLOCK 59.04, LOT 1.01

DRAWING TITLE

GENERAL NOTES
AND MAPPING

CHECKED BY: CJS	DRAWN BY: ENS
SCALE: AS SHOWN	SHEET NO:
PROJECT #: P-22-70-01	FIRST ISSUE: 9/06/2023

DRAWING NO.

SP-101.00

200-FT PROPERTY OWNER'S LIST

Adjoining Properties (56)

Town	Block	Lot	Qualifier	Location	Owner	Owner Address	Owner City/State	Owner Zip
West Orange Township	20	29.01		110 NORTHFIELD AVENUE	BFC REALTY, LLC	110 NORTHFIELD AVE	WEST ORANGE, NJ	07052
West Orange Township	20	37		10 ROLLINSON STREET	URSO,JOSEPH A + JANET A	10 ROLLINSON STREET	WEST ORANGE, N.J.	07052
West Orange Township	21	36		26 ROLLINSON STREET	PERLMUTTER,STEVE + GRACE	26 ROLLINSON STREET	WEST ORANGE, N.J.	07052
West Orange Township	21	42		100 SWAINE PLACE	CLARK, SAMMY & VERA	100 SWAINE PLACE	WEST ORANGE, NJ	07052
West Orange Township	22	30		63 QUINBY PLACE	ABELL, ALEXIS M & MCLAMED, MEGAN M	63 QUINBY PL	WEST ORANGE, NJ	07052
West Orange Township	22	31		108 RIGGS PLACE	LOMA,GARY + EILEEN	108 RIGGS PLACE	WEST ORANGE, NEW JERSEY	07052
West Orange Township	23	30		63 PILLOT PLACE	BURNETT, ANTONIO & JOY N.	63 PILLOT PLACE	WEST ORANGE, NJ	07052
West Orange Township	23	31		66 QUINBY PLACE	INTERIANO, MARIO	66 QUINBY PL	WEST ORANGE, NJ	07052
West Orange Township	58	1.01		1 BEVERLY ROAD	SALERNO, SVETLANA	1 BEVERLY ROAD	WEST ORANGE, N. J.	07052
West Orange Township	58	1.03		176 NORTHFIELD AVENUE	WHITE, KIMBERLY Z & MICHAEL E	176 NORTHFIELD AVE	WEST ORANGE, NJ	07052
West Orange Township	58	1.04		120 NORTHFIELD AVENUE	SETON HALL PREPARATORY SCHOOL	120 NORTHFIELD AVENUE	WEST ORANGE,N.J.	07052
West Orange Township	58	1.05		9 BEVERLY ROAD	HENRIQUEZ, CARLOS G. & SARA	9 BEVERLY ROAD	WEST ORANGE, NJ	07052
West Orange Township	58	1.06		11 BEVERLY ROAD	SETON HALL PREPARATORY SCHOOL	11 BEVERLY ROAD	WEST ORANGE, N.J.	07052

created on 11/1/2022

Town	Block	Lot	Qualifier	Location	Owner	Owner Address	Owner City/State	Owner Zip
West Orange Township	58	1.07		23 BEVERLY ROAD	NERRIERE, DOMINIQUE & NATALIE E.	23 BEVERLY ROAD	WEST ORANGE, NJ	07052
West Orange Township	58	1.08		15 BEVERLY ROAD	WRIGHT, CHARLES LEE	15 BEVERLY ROAD	WEST ORANGE, NJ	07052
West Orange Township	58	1.09		19 BEVERLY ROAD	PATTERSON, MARK & CHRISTINE	19 BEVERLY ROAD	WEST ORANGE, N.J.	07052
West Orange Township	58	1.10		27 BEVERLY ROAD	GUNN, DENNIS & JUDITH	27 BEVERLY ROAD	WEST ORANGE,N.J.	07052
West Orange Township	58	1.11		BEVERLY ROAD	TERRACE DEVELOPERS, LLC	820 MORRIS TPK STE. 301	SHORT HILLS, NJ	07078
West Orange Township	58	1.12		35 BEVERLY ROAD	MEYERSON, PAUL & RIESENMAN,L	35 BEVERLY ROAD	WEST ORANGE, NEW JERSEY	07052
West Orange Township	58	1.14		33 BEVERLY ROAD	TOWNSHIP OF WEST ORANGE	66 MAIN ST.	WEST ORANGE, NJ	07052
West Orange Township	58.04	16		24 BEVERLY ROAD	J ALBENBERG REVOCABLE LIVING TRUST	24 BEVERLY RD	WEST ORANGE, NJ	07052
West Orange Township	58.04	18		20 BEVERLY ROAD	MILSTEIN, SETH MICHAEL & DEBRA	20 BEVERLY RD	WEST ORANGE, NJ	07052
West Orange Township	59	14		51 ROLLINSON STREET	JEAN, JACQUELINE	51 ROLLINSON STREET	WEST ORANGE, NJ	07052
West Orange Township	59	15		49 ROLLINSON STREET	D'AGOSTINO, JAMES J.	49 ROLLINSON STREET	WEST ORANGE, N.J.	07052
West Orange Township	59	16		47 ROLLINSON STREET	DONONCOURT, MUELLER & YVA	47 ROLLINSON STREET	WEST ORANGE, NEW JERSEY	07052
West Orange Township	59	17		1 GLEN ROAD	COHEN, JEDIDIAH & DAWSON, KATHERINE	1 GLEN ROAD	WEST ORANGE, NJ	07052
West Orange Township	59	18		3 GLEN ROAD	OUTERBRIDGE, KIM	3 GLEN RD.	WEST ORANGE, NJ	07052
West Orange Township	59	19		5 GLEN ROAD	TAMKINS, THERESA	5 GLEN ROAD	WEST ORANGE, NJ	07052
West Orange Township	59.02	11		13 OAKRIDGE ROAD	SULLIVAN, WILLIAM C. & LAURA J.F.	13 OAKRIDGE RD	WEST ORANGE, NJ	07052
West Orange Township	59.02	13		9 OAKRIDGE ROAD	DESHONG, AUDREY J.	9 OAKRIDGE RD.	WEST ORANGE, NJ	07052
West Orange Township	59.02	14		7 OAKRIDGE ROAD	CONLEY, ERIC J & SBRIGATO, TINA	7 OAKRIDGE RD	WEST ORANGE, NJ	07052
West Orange Township	59.02	15		5 OAKRIDGE ROAD	BEREZA, BORIS &MEGHAN EVANS	5 OAKRIDGE RD.	WEST ORANGE, NJ	07052
West Orange Township	59.02	16		3 OAKRIDGE ROAD	WOOD, CRAIG & REBECCA	3 OAKRIDGE ROAD	WEST ORANGE, NJ	07052
West Orange Township	59.02	17		1 OAKRIDGE ROAD	DIEHL, PAUL & KATE	189 STERLING PL. #16	BROOKLYN,NY	11238
West Orange Township	59.04	1.01		120 NORTHFIELD AVENUE	SETON HALL PREPARATORY SCHOOL	120 NORTHFIELD AVENUE	WEST ORANGE,N.J.	07052
West Orange Township	59.04	1.02		15 ROLLINSON STREET	BEAUCLUCHE, JEAN & LOVELY	15 ROLLINSON ST	WEST ORANGE, NJ	07052

created on 11/1/2022

Town	Block	Lot	Qualifier	Location	Owner	Owner Address	Owner City/State	Owner Zip
West Orange Township	59.04	1.03		11 ROLLINSON STREET	ZAMORA, MARIA CRISTINA V.	11 ROLLINSON ST	WEST ORANGE, NJ	07052
West Orange Township	59.04	1.05		1 ROLLINSON STREET	YASIN, ABDUR RAZZAAQ & BEGONIA	1 ROLLINSON STREET	WEST ORANGE, NJ	07052
West Orange Township	59.04	1.06		9 ROLLINSON STREET	LINDER, DENNIS & LINDA	9 ROLLINSON ST.	WEST ORANGE, N.J.	07052
West Orange Township	59.04	1.07		17 ROLLINSON STREET	DAVIS, ROBERT	17 ROLLINSON STREET	WEST ORANGE, NJ	07052
West Orange Township	59.04	1.08		5 ROLLINSON STREET	NEWROCK, WILLIAM & GABRIELLA	5 ROLLINSON ST	WEST ORANGE, NJ	07052
West Orange Township	59.04	1.10		19 ROLLINSON STREET	HARTMAN,CHRISTOPHER J &LAURA DIORIO	19 ROLLINSON STREET	WEST ORANGE, NJ	07052
West Orange Township	59.04	1.11		25 ROLLINSON STREET	JONES, LESTER III&CERRETO,GERALDINE	25 ROLLINSON STREET	WEST ORANGE, NJ	07052
West Orange Township	59.04	1.12		35 ROLLINSON STREET	SALAZAR, JOSE & LUCY	35 ROLLINSON ST	WEST ORANGE, NJ	07052
West Orange Township	59.04	1.13		31 ROLLINSON STREET	BERETAY, JILL LEFKOWITZ & ABUDULAH	31 ROLLINSON STREET	WEST ORANGE, NJ	07052
West Orange Township	59.04	1.14		29 ROLLINSON STREET	ALEXANDRE, SURUMEGA	29 ROLLINSON STREET	WEST ORANGE, NJ	07052
West Orange Township	59.04	1.15		21 ROLLINSON STREET	WILLIAMS, JUSTIN KYLE	21 ROLLINSON STREET	WEST ORANGE, N.J.	07052
West Orange Township	59.04	1.16		23 ROLLINSON STREET	WALLENSTEIN, DREW & CARLY	23 ROLLINSON ST	WEST ORANGE, NJ	07052
West Orange Township	59.04	1.17		33 ROLLINSON STREET	WEEKES, MONIQUE A.	33 ROLLINSON ST	WEST ORANGE, NJ	07052
West Orange Township	59.04	1.18		37 ROLLINSON STREET	BOYDMAN, JASON & NATALIE	37 ROLLINSON ST	WEST ORANGE, NJ	07052
West Orange Township	59.04	1.19		39 ROLLINSON STREET	CHESTER, PAUL	39 ROLLINSON STREET	WEST ORANGE, NJ	07006
West Orange Township	59.04	1.22		43 ROLLINSON STREET	ANSVANANDA, DAVID T	43 ROLLINSON ST	WEST ORANGE, NJ	07052
West Orange Township	78.01	2.01		111 NORTHFIELD AVENUE	SPRINGFIELD AVE LLC	188 EAGLE ROCK AVE #1	ROSELAND, NJ	07068
West Orange Township	78.02	2		125 NORTHFIELD AVENUE	WHS LLC % COMMUNITY MANAGEMENT	1030 CLIFTON AVENUE	CLIFTON, NJ	07013
West Orange Township	78.02	12		147 NORTHFIELD AVENUE	BINAKAJ, VETON	147 NORTHFIELD AVENUE	WEST ORANGE, NEW JERSEY	07052
West Orange Township	78.02	13		149 NORTHFIELD AVENUE	TADDEO, RICHARD & EWA	149 NORTHFIELD AVENUE	WEST ORANGE, N.J.	07052

SCHEDULE OF REVISIONS

REV.	DATE	DESCRIPTION OF CHANGES	DRAWN BY	CHK. BY

OWNER
SETON HALL PREPARATORY SCHOOL
120 NORTHFIELD AVENUE
TOWNSHIP OF WEST ORANGE, NJ 07052

APPLICANT
SETON HALL PREPARATORY SCHOOL
120 NORTHFIELD AVENUE
TOWNSHIP OF WEST ORANGE, NJ 07052

E 2 PROJECT MANAGEMENT LLC
87 HIBERNIA AVENUE
ROCKAWAY, N.J. 07866
PHONE: (973) 299-5200
FAX: (973) 299-5059
www.E2PM.com

THIS DRAWING DOES NOT INCLUDE NECESSARY COMPONENTS FOR CONSTRUCTION SAFETY. ALL CONSTRUCTION MUST BE DONE IN COMPLIANCE WITH THE OCCUPATIONAL SAFETY AND HEALTH ACT OF 1970 AND ALL RULES AND REGULATIONS THERETO APPURTENANT. THIS DRAWING AND THE DESIGN FEATURES OR CONSTRUCTION DISCLOSED ARE PROPRIETARY TO E2 PROJECT MANAGEMENT LLC AND SHALL NOT BE REPRODUCED, ALTERED OR COPIED WITHOUT WRITTEN PERMISSION, SHALL NOT BE USED IN ANY MANNER DETRIMENTAL TO ITS INTEREST AND SHALL BE RETURNED UPON REQUEST.

N.J. ENGINEERING CERTIFICATE OF AUTHORIZATION No. 24GA28118200

I CERTIFY THAT THESE PLANS HAVE BEEN PREPARED UNDER MY SUPERVISION

STATE OF NEW JERSEY · CHARLES J. STEWART · No. GB35884 · LICENSED · PROFESSIONAL ENGINEER & LAND SURVEYOR

Digitally signed by Charles Stewart
Date: 2023.09.07 10:35:31 -04'00'

CHARLES J. STEWART, P.E., P.L.S.
NJ REGISTERED PROFESSIONAL ENGINEER LICENSE AND
NJ PROFESSIONAL LAND SURVEYOR LICENSE NO. 24GB035884

PROJECT NAME

SETON HALL PREPARATORY SCHOOL
PROPOSED DIGITAL LAB AND ENTRY

120 NORTHFIELD AVENUE
TOWNSHIP OF WEST ORANGE
ESSEX COUNTY, NEW JERSEY
TAX BLOCK 59.04, LOT 1.01

DRAWING TITLE

200-FT PROPERTY OWNER'S LIST

CHECKED BY: CJS	DRAWN BY: ENS
SCALE: AS SHOWN	SHEET NO:
PROJECT #: P-22-70-01	FIRST ISSUE: 9/06/2023

DRAWING NO.

SP-101.10

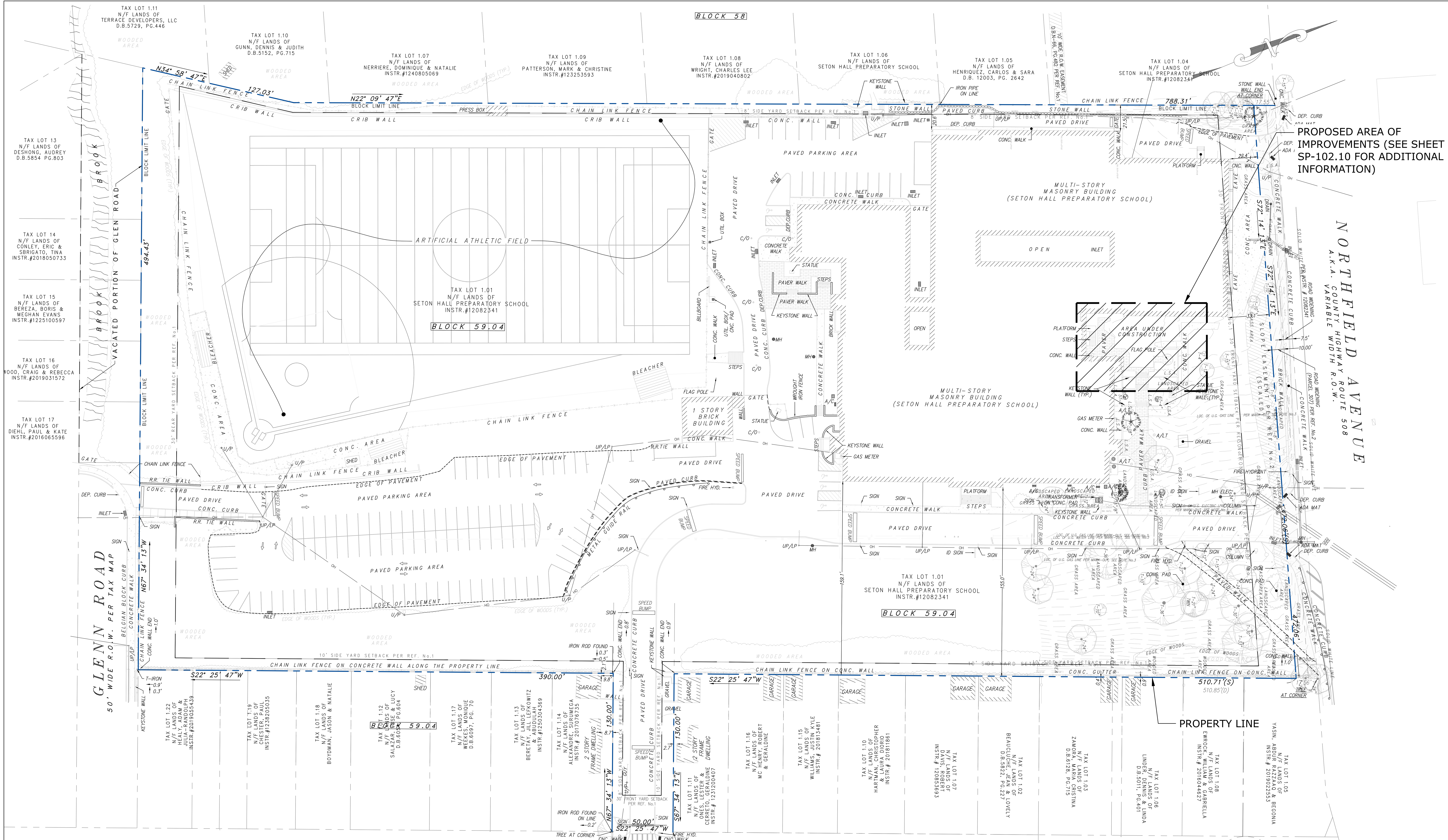

SURVEY NOTES

1. TAX BLOCK 59.04 LOT 1.01 LOT AREA: 444,580 SF. or 10.21 Ac.
2. SUBJECT TO SUCH STATE OF FACTS AS A FULL AND ACCURATE TITLE SEARCH MIGHT DISCLOSE.
3. UTILITY LOCATIONS BASED ON SURFACE OBSERVATIONS; SUB-SURFACE CONDITIONS AND LOCATIONS ARE NOT CERTIFIED. ACTUAL CONFIGURATIONS MUST BE FIELD-VERIFIED VIA TEST PITS AND UTILITY COMPANY MARK-OUTS. PRIOR TO CONSTRUCTION CALL N.J. UNDERGROUND 1-800-272-1000.
4. THIS SURVEY IS SUBJECT TO EASEMENTS OF RECORD AND OTHER PERTINENT FACTS WHICH A TITLE SEARCH MIGHT DISCLOSE. THE UNDERSIGNED IS NOT QUALIFIED TO MAKE ANY DETERMINATION OF THE EXISTENCE OR NON-EXISTENCE OF WETLANDS AND/OR CONTAMINATION, THEREFORE, NO STATEMENT IS BEING MADE OR IMPLIED, NOR SHOULD IT BE CONSTRUED THAT ANY STATEMENT IS BEING MADE BY THE FACT THAT NO EVIDENCE OF WETLANDS OR CONTAMINATION IS SHOWN. THIS SURVEY DOES NOT SHOW THE EXISTENCE OR NON-EXISTENCE OF FLOOD PLAIN, ZONING OR ANY OTHER LAND USE RESTRICTIONS.
5. A WRITTEN WAIVER AND DIRECTION NOT TO SET CORNER MARKERS BEEN HAS BEEN OBTAINED FROM THE ULTIMATE USER PURSUANT TO P.L. 2003, C.14 (N.J.S.A. 45:8-36.3) AND N.J.A.C. 13:40-5.1(D).
6. UTILITY LOCATIONS SHOWN HEREON ARE BASED ON ABOVE GROUND OBSERVATIONS ONLY. THE TYPE AND LOCATION OF UNDERGROUND AND OTHER UTILITIES ARE NOT GUARANTEED TO BE ACCURATE OR ALL-INCLUSIVE. THE USER OF THIS SURVEY IS RESPONSIBLE FOR MAKING HIS OWN DETERMINATIONS AS TO THE TYPE, LOCATION AND SUITABILITY OF UTILITIES AS MAY BE NECESSARY.
7. THE WORD CERTIFY, AS USED HEREIN, IS UNDERSTOOD TO BE AN EXPRESSION OF PROFESSIONAL OPINION BY THE SURVEYOR, WHICH IS BASED ON HIS BEST KNOWLEDGE, INFORMATION AND BELIEF. AS SUCH, IT IS NEITHER A GUARANTEE NOR A WARRANTY, EXPRESSED OR IMPLIED.
8. I HEREBY CERTIFY THAT THIS SURVEY WAS PREPARED UNDER MY DIRECT SUPERVISION AND THAT, TO THE BEST OF MY KNOWLEDGE, THIS MAP IS A TRUE AND CORRECT REPRESENTATION OF ACTUAL CONDITIONS AS OF **JULY 2021**. THIS CERTIFICATION IS MADE ONLY TO THE PARTIES LISTED BELOW AND IS NOT TRANSFERABLE TO OTHER PARTIES.
9. THIS CERTIFICATION IS ONLY VALID FOR THIS MAP AND COPIES THEREOF IF SAID MAPS BEAR THE IMPRESSED SEAL OF THE SURVEYOR WHOSE SIGNATURE APPEARS HEREON. THE ORIGINAL SIGNED AND SEALED DOCUMENT IS THE DOCUMENT OF RECORD. IF DIGITAL INFORMATION IS ALSO SUPPLIED, IT IS DONE SO FOR INFORMATIONAL PURPOSES ONLY.
10. ALL SHOWN ELEVATIONS BASED UPON NAVD-88 (GEOID 12A), ALL SHOWN DISTANCES ARE "GROUND" DISTANCES. N.J.S.P.C.S (NAD-83) HAS BEEN ESTABLISHED BY USING RTK GPS.

MAP REFERENCES

1) BOUNDARY AND TOPOGRAPHIC DATA SHOWN HEREIN WAS OBTAINED FROM A PLAN ENTITLED "BOUNDARY AND PARTIAL TOPOGRAPHIC SURVEY, SETON HALL PREPARATORY SCHOOL, 120 NORTHFIELD AVENUE, TOWNSHIP OF WEST ORANGE, ESSEX COUNTY, NEW JERSEY, BLOCK 59.04, LOT 1.01" PREPARED BY E2 PROJECT MANAGEMENT, LLC, DATED JULY 25, 2022.

SCHEDULE OF REVISIONS

REV.	DATE	DESCRIPTION OF CHANGES	DRAWN BY	CHK. BY

OWNER
SETON HALL PREPARATORY SCHOOL
120 NORTHFIELD AVENUE
TOWNSHIP OF WEST ORANGE, NJ 07052

APPLICANT
SETON HALL PREPARATORY SCHOOL
120 NORTHFIELD AVENUE
TOWNSHIP OF WEST ORANGE, NJ 07052

E 2 PROJECT MANAGEMENT LLC

87 HIBERNIA AVENUE
ROCKAWAY, N.J. 07866
PHONE: (973) 299-5200
FAX: (973) 299-5059
www.E2PM.com

THIS DRAWING DOES NOT INCLUDE NECESSARY COMPONENTS FOR CONSTRUCTION SAFETY. ALL CONSTRUCTION MUST BE DONE IN COMPLIANCE WITH THE OCCUPATIONAL SAFETY AND HEALTH ACT OF 1970 AND ALL RULES AND REGULATIONS THERETO APPURTENANT. THIS DRAWING AND THE DESIGN FEATURES OR CONSTRUCTION DISCLOSED ARE PROPRIETARY TO E2 PROJECT MANAGEMENT LLC AND SHALL NOT BE REPRODUCED, ALTERED OR COPIED WITHOUT WRITTEN PERMISSION, SHALL NOT BE USED IN ANY MANNER DETRIMENTAL TO ITS INTEREST AND SHALL BE RETURNED UPON REQUEST.

N.J. ENGINEERING CERTIFICATE OF AUTHORIZATION No. 24GA28118200

I CERTIFY THAT THESE PLANS HAVE BEEN PREPARED UNDER MY SUPERVISION

STATE OF NEW JERSEY ★ CHARLES J. STEWART No. GB35884 ★LICENSED★ PROFESSIONAL ENGINEER & LAND SURVEYOR

Digitally signed by Charles Stewart
Date: 2023.09.07 10:36:02 -04'00'

CHARLES J. STEWART, P.E., P.L.S.
NJ REGISTERED PROFESSIONAL ENGINEER LICENSE AND
NJ PROFESSIONAL LAND SURVEYOR LICENSE NO. 24GB035884

PROJECT NAME

SETON HALL PREPARATORY SCHOOL
PROPOSED DIGITAL LAB AND ENTRY

120 NORTHFIELD AVENUE
TOWNSHIP OF WEST ORANGE
ESSEX COUNTY, NEW JERSEY
TAX BLOCK 59.04, LOT 1.01

DRAWING TITLE

OVERALL EXISTING CONDITIONS PLAN

CHECKED BY: CJS	DRAWN BY: ENS
SCALE: AS SHOWN	SHEET NO:
PROJECT #: P-22-70-01	FIRST ISSUE: 9/06/2023

DRAWING NO.

SP-102.00

DEMOLITION NOTES

1. ALL DEMOLITION ACTIVITIES ARE TO BE PERFORMED IN ACCORDANCE WITH ALL FEDERAL, STATE AND LOCAL REGULATIONS.
2. DURING SITE DEMOLITION AND REPAIRS, THE FOLLOWING FEATURES SHALL REMAIN UNLESS SPECIFIED:
   - EXISTING TREES
   - EXISTING LIGHT POLES
   - EXISTING UTILITY POLES
   - EXISTING UNDERGROUND UTILITIES
   - EXISTING STREET SIGNS
3. ALL EXISTING U/G UTILITIES ENTERING THE SITE THAT CONFLICT WITH PROPOSED WORK SHALL BE RE-LOCATED, CAPPED OR REMOVED PRIOR TO ANY DEMOLITION.
4. ALL EXISTING MANHOLES, VALVE BOXES, UTILITY ACCESS, CATCH BASINS ETC. SHALL BE PROTECTED AND NOT DAMAGED. RESET THE TOP OF RIMS AS NOTED ON PLANS.
5. ALL CATCH BASINS AND MANHOLES SHOWN ON THIS DRAWING WITHIN THE LIMIT OF WORK SHALL BE CLEANED OUT.
6. EXISTING FIRE HYDRANTS SHALL BE PROTECTED AND MAINTAINED ACTIVE THROUGHOUT THE DEMOLITION AND CONSTRUCTION OF THE PROJECT.
7. CONTRACTOR SHALL BE RESPONSIBLE FOR REMOVING ALL U/G OBSTRUCTIONS AND DISPOSING OF ALL EXCAVATED SOILS AND SPOILS.
8. ALL DAMAGED PUBLIC PROPERTY, INCLUDING BUT NOT LIMITED TO, CURBING, LIGHT POLES, LANDSCAPING, ETC. TO BE PROTECTED DURING DEMOLITION AND CONSTRUCTION.
9. ANY DAMAGE TO THE PUBLIC RIGHT OF WAY MUST BE REPAIRED/INSTALLED TO EQUAL STANDARDS.
10. PEDESTRIAN ACCESS ALONG PUBLIC STREETS AND SIDEWALKS TO BE MAINTAINED AT ALL TIMES.

EXISTING TREE PROTECTION & REMOVAL NOTES

1. EXISTING TREES THAT ARE TO REMAIN SHALL BE PROTECTED.
2. EXISTING TREES SHALL BE TRIMMED BACK AS NEEDED.

CONSTRUCTION SAFETY

1. CONTRACTOR SHALL IMPLEMENT A SIDEWALK PROTECTION PLAN TO SAFEGUARD THE PEDESTRIANS.
2. ANY SIDEWALK CLOSURES DURING CONSTRUCTION SHALL BE COORDINATED WITH THE OWNER.

SOIL EROSION CONTROL NOTES

1. PROVIDE INLET PROTECTION FOR ALL EXISTING CATCH BASINS AND ALSO FOR FUTURE CATCH BASINS AFTER CONSTRUCTION. REFERENCE DETAILS ON DRAWINGS SP-105.00 THROUGH SP-105.20.

SOLID AND WASTE MANAGEMENT

1. THE CONTRACTOR IS RESPONSIBLE FOR PREPARING AND IMPLEMENTING A DETAILED WASTE MANAGEMENT PLAN THAT INCLUDES ALL THE POTENTIAL WASTES TO BE ENCOUNTERED AT THE SITE, THEIR ONSITE HANDLING (COLLECTION AND STORAGE), TRANSPORT, AND DISPOSAL.
2. THE CONTRACTOR SHALL PROVIDE ALL EQUIPMENT, MATERIAL, AND LABOR REQUIRED TO HANDLE ALL SOLID AND LIQUID WASTE IN ACCORDANCE WITH ALL FEDERAL, STATE, AND LOCAL LAWS AND REGULATIONS.
3. THE CONTRACTOR SHALL DISTINGUISH SOLID WASTE AND HAZARDOUS WASTE AS DEFINED IN APPLICABLE REGULATIONS AND LAWS REFERENCED WITHIN THIS SECTION. SOLID WASTE AND HAZARDOUS WASTE SHALL BE SEGREGATED IN DESIGNATED AREAS PRIOR TO OFF-SITE DISPOSAL.
4. ALL REGULATED WASTE SHALL BE DISPOSED OFF SITE IN ACCORDANCE WITH ALL FEDERAL, STATE, AND LOCAL LAWS AND REGULATIONS.
5. IF SOLID WASTE IS TEMPORARILY STORED IN CONTAINERS PRIOR TO OFF-SITE DISPOSAL, PROVISIONS SHALL BE MADE TO COVER THE CONTAINER TO PREVENT THE GENERATION OF AIRBORNE DUST AND/OR CONTAMINATED RUNOFF.
6. THE CONTRACTOR SHALL BE RESPONSIBLE FOR DEMONSTRATING TO THE OWNER THE ULTIMATE DISPOSAL METHOD, INCLUDING THE IDENTIFICATION OF THE WASTE TRANSPORTER AND DISPOSAL FACILITY.
7. THE OWNER SHALL BE RESPONSIBLE FOR WASTE CLASSIFICATION SAMPLING FOR OFFSITE DISPOSAL.
8. THE CONTRACTOR SHALL PROVIDE ALL EQUIPMENT, MATERIAL, AND LABOR REQUIRED TO HANDLE ALL AQUEOUS WASTE IN ACCORDANCE WITH THESE SPECIFICATIONS AND ALL APPLICABLE FEDERAL, STATE, AND LOCAL LAWS AND REGULATIONS.
9. THE PROJECT IS A "NET-CUT" PROJECT WITH THE MAJORITY OF DEMOLITION DEBRIS AND EXCAVATED MATERIAL BEING REMOVED FROM THE SITE.
10. ALL CONTAMINATED SOIL, MATERIAL, AND BUILDING DEBRIS SHALL BE PLACED IN POLYETHYLENE-LINED ROLL OFF CONTAINERS OR DUMP TRAILERS SUPPLIED BY THE CONTRACTOR AND SHIPPED OFFSITE IN BULK.
11. MISCELLANEOUS WASTES GENERATED AS A RESULT OF THE PROJECT SHALL BE STORED IN HEAVY DUTY TRASH BAGS, FIBER DRUMS, DUMPSTERS, OR OTHER SUITABLE CONTAINERS.
12. ALL SHIPMENTS SHALL BE APPROPRIATELY PLACARDED, LABELED, AND MANIFESTED BY THE CONTRACTOR AS REQUIRED BY ALL APPLICABLE REGULATIONS.
13. DEMOLISHED MATERIAL TO BE REUSED ONSITE AS BACKFILL MUST FIRST BE VERIFIED BY THE OWNER THAT THE SOURCE MATERIAL IS NOT HAZARDOUS OR CONTAMINATED THROUGH TCLP TESTING AS DEFINED BY 40 CFR 261.24 USING ANALYTICAL METHODS DEFINED BY EPA SW-846.
14. THE CONTRACTOR'S METHODS AND PROCEDURES TO REMOVE, HANDLE, AND DISPOSE OF THE LEAD PAINT CHIPS SHALL BE INCLUDED IN THE LEAD BASED/CONTAINING PAINT HANDLING PLAN TO BE SUBMITTED TO AND APPROVED BY THE OWNER PRIOR TO THE START OF ANY RELATED WORK. THE PLANS SHALL COMPLY WITH APPLICABLE REQUIREMENTS OF FEDERAL, STATE AND LOCAL HAZARDOUS WASTE REGULATIONS. THE CONTRACTOR SHALL AUGMENT THESE REQUIREMENTS WITH ANY ADDITIONAL MEASURES TYPICALLY REQUIRED BY APPLICABLE REGULATIONS TO ENSURE A FULLY COMPLIANT PROTECT PLAN.
15. CONTRACTOR SHALL HAVE A COMPETENT PERSON WHO IS TRAINED IN THE RECOGNITION AND CONTROL OF LEAD HAZARDS IN ACCORDANCE WITH CURRENT FEDERAL, STATE, AND LOCAL REGULATIONS. THE COMPETENT PERSON DOES NOT HAVE TO BE A CERTIFIED INDUSTRIAL HYGIENIST (CIH).
16. THE CONTRACTOR SHALL SUBMIT FOR REVIEW AND APPROVAL BY THE OWNER AN ASBESTOS ABATEMENT PLAN PRIOR TO THE START OF WORK. NO ASBESTOS RELATED WORK SHALL BEGIN WITHOUT OWNER APPROVAL OF THE PLAN. THE WASTE ASSESSMENT REPORT (REFERENCE APPENDIX 5) OUTLINES THE AREAS IDENTIFIED AS HAVING ACM.
17. THE CONTRACTOR IS RESPONSIBLE FOR RETAINING A QUALIFIED ASBESTOS ABATEMENT CONTRACTOR WHO IS LICENSED BY THE NEW JERSEY DEPARTMENT OF COMMUNITY OF AFFAIRS TO PERFORM ASBESTOS ABATEMENT WORK. THE CONTRACTOR SHALL AUGMENT THESE REQUIREMENTS WITH ANY ADDITIONAL MEASURES TYPICALLY REQUIRED BY APPLICABLE REGULATIONS TO ENSURE A FULLY COMPLIANT PROTECT PLAN.

LEGEND

Symbol	Description
— — — —	LIMIT OF DISTURBANCE
(shaded)	EXISTING PAVERS TO BE REMOVED
(hatched)	EXISTING SIDEWALK TO BE REMOVED

MAP REFERENCES

1) BOUNDARY AND TOPOGRAPHIC DATA SHOWN HEREIN WAS OBTAINED FROM A PLAN ENTITLED "BOUNDARY AND PARTIAL TOPOGRAPHIC SURVEY, SETON HALL PREPARATORY SCHOOL, 120 NORTHFIELD AVENUE, TOWNSHIP OF WEST ORANGE, ESSEX COUNTY, NEW JERSEY, BLOCK 59.04, LOT 1.01" PREPARED BY E2 PROJECT MANAGEMENT, LLC, DATED JULY 25, 2022.

0 10' 20' 40'
SCALE: 1"=20'

SCHEDULE OF REVISIONS

REV.	DATE	DESCRIPTION OF CHANGES	DRAWN BY	CHK. BY

OWNER
SETON HALL PREPARATORY SCHOOL
120 NORTHFIELD AVENUE
TOWNSHIP OF WEST ORANGE, NJ 07052

APPLICANT
SETON HALL PREPARATORY SCHOOL
120 NORTHFIELD AVENUE
TOWNSHIP OF WEST ORANGE, NJ 07052

E 2 PROJECT MANAGEMENT LLC
87 HIBERNIA AVENUE
ROCKAWAY, N.J. 07866
PHONE: (973) 299-5200
FAX: (973) 299-5059
www.E2PM.com

THIS DRAWING DOES NOT INCLUDE NECESSARY COMPONENTS FOR CONSTRUCTION SAFETY. ALL CONSTRUCTION MUST BE DONE IN COMPLIANCE WITH THE OCCUPATIONAL SAFETY AND HEALTH ACT OF 1970 AND ALL RULES AND REGULATIONS THERETO APPURTENANT. THIS DRAWING AND THE DESIGN FEATURES OR CONSTRUCTION DISCLOSED ARE PROPRIETARY TO E2 PROJECT MANAGEMENT LLC AND SHALL NOT BE REPRODUCED, ALTERED OR COPIED WITHOUT WRITTEN PERMISSION, SHALL NOT BE USED IN ANY MANNER DETRIMENTAL TO ITS INTEREST AND SHALL BE RETURNED UPON REQUEST.

N.J. ENGINEERING CERTIFICATE OF AUTHORIZATION No. 24GA28118200

I CERTIFY THAT THESE PLANS HAVE BEEN PREPARED UNDER MY SUPERVISION

STATE OF NEW JERSEY · CHARLES J. STEWART · No. GB35884 · LICENSED · PROFESSIONAL ENGINEER & LAND SURVEYOR

Digitally signed by Charles Stewart
Date: 2023.09.07 10:36:38 -04'00'

CHARLES J. STEWART, P.E., P.L.S.
NJ REGISTERED PROFESSIONAL ENGINEER LICENSE AND
NJ PROFESSIONAL LAND SURVEYOR LICENSE NO. 24GB035884

PROJECT NAME

SETON HALL PREPARATORY SCHOOL
PROPOSED DIGITAL LAB AND ENTRY

120 NORTHFIELD AVENUE
TOWNSHIP OF WEST ORANGE
ESSEX COUNTY, NEW JERSEY
TAX BLOCK 59.04, LOT 1.01

DRAWING TITLE

EXISTING CONDITIONS AND DEMOLITION PLAN

CHECKED BY: CJS	DRAWN BY: ENS
SCALE: 1" = 20'	SHEET NO:
PROJECT #: P-22-70-01	FIRST ISSUE: 9/06/2023

DRAWING NO.

SP-102.10

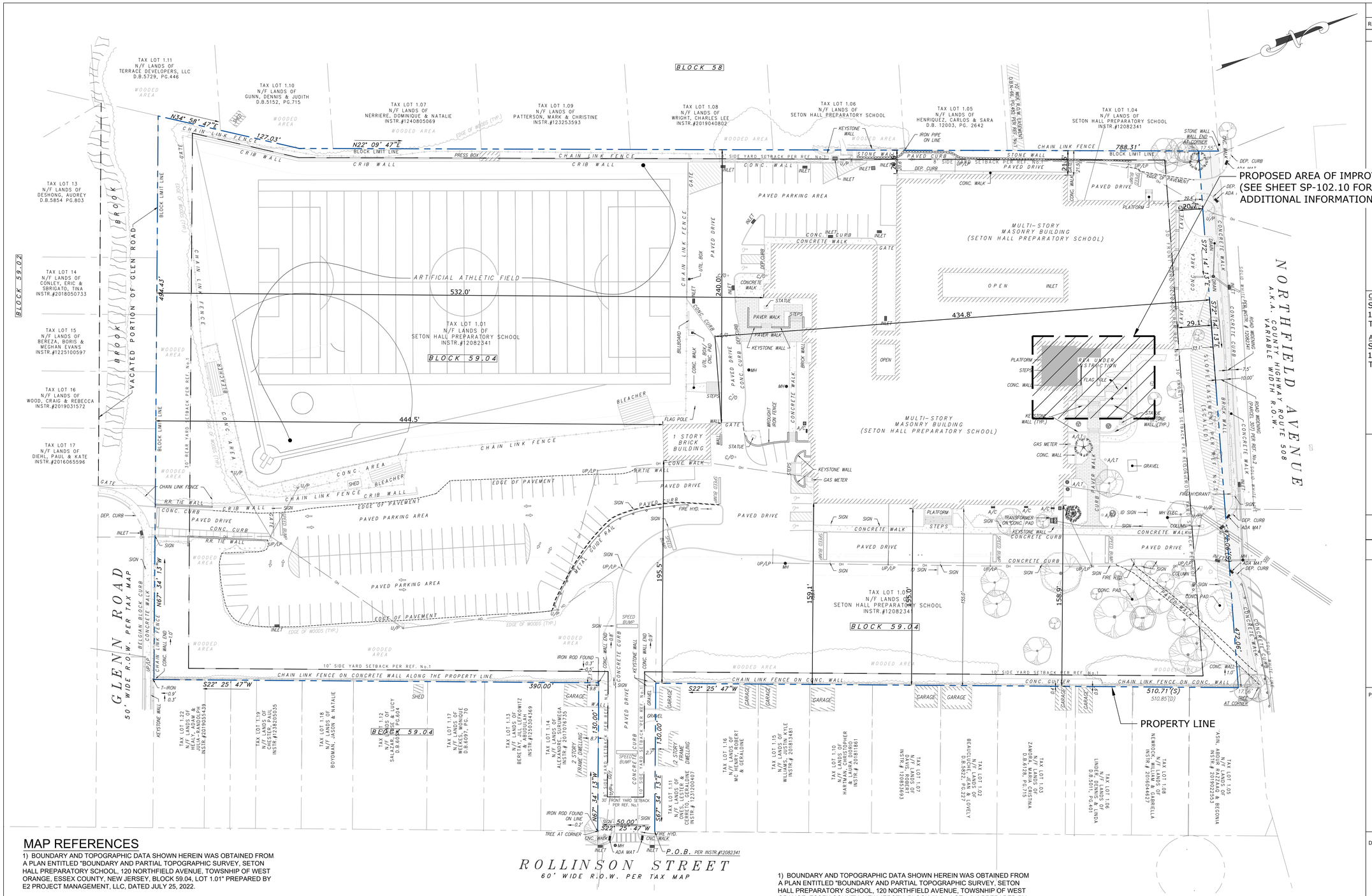

MAP REFERENCES

1) BOUNDARY AND TOPOGRAPHIC DATA SHOWN HEREIN WAS OBTAINED FROM A PLAN ENTITLED "BOUNDARY AND PARTIAL TOPOGRAPHIC SURVEY, SETON HALL PREPARATORY SCHOOL, 120 NORTHFIELD AVENUE, TOWSNHIP OF WEST ORANGE, ESSEX COUNTY, NEW JERSEY, BLOCK 59.04, LOT 1.01" PREPARED BY E2 PROJECT MANAGEMENT, LLC, DATED JULY 25, 2022.

TOTAL LIMIT OF DISTURBANCE: 2,994 SF / 0.069 ACRES
PROJECT IS EXEMPT FROM SOIL CONSERVATION DISTRICT APPROVAL AS IT DISTURBS LESS THAN 5,000 SF

THIS PROJECT IS EXEMPT FROM SOIL COMPACTION TESTING SINCE IT IS LOCATED IN THE METROPOLITAN PLANNING AREA (PA-1) ZONE.

1) BOUNDARY AND TOPOGRAPHIC DATA SHOWN HEREIN WAS OBTAINED FROM A PLAN ENTITLED "BOUNDARY AND PARTIAL TOPOGRAPHIC SURVEY, SETON HALL PREPARATORY SCHOOL, 120 NORTHFIELD AVENUE, TOWSNHIP OF WEST ORANGE, ESSEX COUNTY, NEW JERSEY, BLOCK 59.04, LOT 1.01" PREPARED BY E2 PROJECT MANAGEMENT, LLC, DATED JULY 25, 2022.

0 20' 40' 80'
SCALE: 1"=40'

SCHEDULE OF REVISIONS

REV.	DATE	DESCRIPTION OF CHANGES	DRAWN BY	CHK. BY

OWNER
SETON HALL PREPARATORY SCHOOL
120 NORTHFIELD AVENUE
TOWNSHIP OF WEST ORANGE, NJ 07052

APPLICANT
SETON HALL PREPARATORY SCHOOL
120 NORTHFIELD AVENUE
TOWNSHIP OF WEST ORANGE, NJ 07052

E 2 PROJECT MANAGEMENT LLC
87 HIBERNIA AVENUE
ROCKAWAY, N.J. 07866
PHONE: (973) 299-5200
FAX: (973) 299-5059
www.E2PM.com

THIS DRAWING DOES NOT INCLUDE NECESSARY COMPONENTS FOR CONSTRUCTION SAFETY. ALL CONSTRUCTION MUST BE DONE IN COMPLIANCE WITH THE OCCUPATIONAL SAFETY AND HEALTH ACT OF 1970 AND ALL RULES AND REGULATIONS THERETO APPURTENANT. THIS DRAWING AND THE DESIGN FEATURES OR CONSTRUCTION DISCLOSED ARE PROPRIETARY TO E2 PROJECT MANAGEMENT, LLC AND SHALL NOT BE REPRODUCED, ALTERED OR COPIED WITHOUT WRITTEN PERMISSION, SHALL NOT BE USED IN ANY MANNER DETRIMENTAL TO ITS INTEREST AND SHALL BE RETURNED UPON REQUEST.

N.J. ENGINEERING CERTIFICATE OF AUTHORIZATION No. 24GA28118200

I CERTIFY THAT THESE PLANS HAVE BEEN PREPARED UNDER MY SUPERVISION

STATE OF NEW JERSEY · CHARLES J. STEWART · No. GB35884 · LICENSED · PROFESSIONAL ENGINEER & LAND SURVEYOR

Digitally signed by Charles Stewart
Date: 2023.09.07 10:37:09 -04'00'

CHARLES J. STEWART, P.E., P.L.S.
NJ REGISTERED PROFESSIONAL ENGINEER LICENSE AND NJ PROFESSIONAL LAND SURVEYOR LICENSE NO. 24GB035884

PROJECT NAME

SETON HALL PREPARATORY SCHOOL
PROPOSED DIGITAL LAB AND ENTRY

120 NORTHFIELD AVENUE
TOWNSHIP OF WEST ORANGE
ESSEX COUNTY, NEW JERSEY
TAX BLOCK 59.04, LOT 1.01

DRAWING TITLE

OVERALL SITE PLAN

CHECKED BY: CJS	DRAWN BY: ENS
SCALE: AS SHOWN	SHEET NO:
PROJECT #: P-22-70-01	FIRST ISSUE: 9/06/2023

DRAWING NO.

SP-103.00

HUDSON ESSEX PASSAIC SOIL CONSERVATION DISTRICT NOTES

1. ALL SOIL EROSION AND SEDIMENT CONTROL PRACTICES ON THIS PLAN WILL BE CONSTRUCTED IN ACCORDANCE WITH THE "NEW JERSEY STANDARDS FOR SOIL EROSION AND SEDIMENT CONTROL" 7TH/ EDITION LAST REVISED JULY 2017, EFFECTIVE DECEMBER 2017. THESE MEASURES WILL BE INSTALLED PRIOR TO ANY MAJOR SOIL DISTURBANCE OR IN THEIR PROPER SEQUENCE AND MAINTAINED UNTIL PERMANENT PROTECTION IS ESTABLISHED.
2. SOIL TO BE EXPOSED OR STOCKPILED FOR A PERIOD OF GREATER THAN 14 DAYS, AND NOT UNDER ACTIVE CONSTRUCTION, MAY BE REQUIRED TO BE TEMPORARILY MULCHED, AND SEEDED OR OTHERWISE PROVIDED WITH VEGETATIVE COVER AS PER APPENDIX A3. THIS TEMPORARY COVER SHALL BE MAINTAINED UNTIL SUCH TIME WHEREBY PERMANENT RESTABILIZATION IS ESTABLISHED.
3. SEEDING DATES: THE FOLLOWING SEEDING DATES ARE RECOMMENDED TO BEST ESTABLISH PERMANENT VEGETATIVE COVER WITHIN MOST LOCATIONS IN THE HEPSCD: SPRING - 3/1-5/15 AND FALL - 8/15 - 10/1
4. SEDIMENT FENCES ARE TO BE PROPERLY TRENCHED AND MAINTAINED UNTIL PERMANENT VEGETATIVE COVER IS ESTABLISHED
5. ALL STORM DRAINAGE INLETS SHALL BE PROTECTED BY ONE OF THE PRACTICES ACCEPTED IN THE STANDARDS, AND PROTECTION SHALL REMAIN UNTIL PERMANENT STABILIZATION HAS BEEN ESTABLISHED. STORM DRAINAGE OUTLET POINTS SHALL BE PROTECTED AS REQUIRED BEFORE THEY BECOME FUNCTIONAL.
6. MULCH MATERIALS SHALL BE UN-ROTTED SMALL GRAIN STRAW APPLIED AT THE RATE OF 70 TO 90 POUNDS PER 1,000 SQUARE FEET AND ANCHORED WITH A MULCH ANCHORING TOOL, LIQUID MULCH BINDERS, OR NETTING TIE DOWN. OTHER SUITABLE MATERIALS MAY BE USED IF APPROVED BY THE SOIL CONSERVATION DISTRICT.
7. ALL EROSION CONTROL DEVICES SHALL BE PERIODICALLY INSPECTED, MAINTAINED AND CORRECTED BY THE CONTRACTOR. ANY DAMAGE INCURRED BY EROSION SHALL BE RECTIFIED IMMEDIATELY.
8. THE HUDSON-ESSEX-PASSAIC SOIL CONSERVATION DISTRICT WILL BE NOTIFIED IN WRITING AT LEAST 48 HOURS PRIOR TO ANY SOIL DISTURBING ACTIVITIES. FAX - (862) 333-4507 OR EMAIL - INFORMATION@HEPSCD.ORG
9. THE APPLICANT MUST OBTAIN A DISTRICT ISSUED REPORT-OF-COMPLIANCE PRIOR TO APPLYING FOR THE CERTIFICATE OF OCCUPANCY OR TEMPORARY CERTIFICATE OF OCCUPANCY FROM THE RESPECTIVE MUNICIPALITY, NJ - DCA OR ANY OTHER CONTROLLING AGENCY. CONTACT THE DISTRICT AT 862-333-4505 TO REQUEST A FINAL INSPECTION, GIVING ADVANCED NOTICE UPON COMPLETION OF THE RESTABILIZATION MEASURES. A PERFORMANCE DEPOSIT MAY BE POSTED WITH THE DISTRICT WHEN WINTER WEATHER OR SNOW COVER PROHIBITS THE PROPER APPLICATION OF SEED, MULCH, FERTILIZER OR HYDRO-SEED.
10. PAVED ROADWAYS MUST BE KEPT CLEAN AT ALL TIMES. DO NOT UTILIZE A FIRE OR GARDEN HOSE TO CLEAN ROADS UNLESS THE RUNOFF IS DIRECTED TO A PROPERLY DESIGNED AND FUNCTIONING SEDIMENT BASIN. WATER PUMPED OUT OF THE EXCAVATED AREAS CONTAINS SEDIMENTS THAT MUST BE REMOVED PRIOR TO DISCHARGING TO RECEIVING BODIES OF WATER USING REMOVABLE PUMPING STATIONS, SUMP PITS, PORTABLE SEDIMENTATION TANKS AND/OR SILT CONTROL BAGS.
11. ALL SURFACES HAVING LAWN OR LANDSCAPING AS FINAL COVER ARE TO BE PROVIDED TOPSOIL PRIOR TO RE-SEEDING, SODDING OR PLANTING. A DEPTH OF 5.0 INCHES, FIRMED IN PLACE, IS REQUIRED, AS PER THE STANDARDS FOR TOPSOILING AND LAND GRADING, EFFECTIVE DECEMBER 2017.
12. ALL PLAN REVISIONS MUST BE SUBMITTED TO THE DISTRICT FOR PROPER REVIEW AND APPROVAL.
13. A CRUSHED STONE WHEEL CLEANING TRACKING-PAD IS TO BE INSTALLED AT ALL SITE EXITS USING 2 ½ -1" CRUSHED ANGULAR STONE (ASTM 2 OR 3) TO A MINIMUM LENGTH OF 50 FEET AND MINIMUM DEPTH OF 6". ALL DRIVEWAYS MUST BE PROVIDED WITH CRUSHED STONE UNTIL PAVING IS COMPLETE.
14. STEEP SLOPES INCURRING DISTURBANCE MAY REQUIRE ADDITIONAL STABILIZATION MEASURES. THESE "SPECIAL" MEASURES SHALL BE DESIGNED BY THE APPLICANT'S ENGINEER AND BE APPROVED BY THE SOIL CONSERVATION DISTRICT.
15. THE HUDSON-ESSEX-PASSAIC SOIL CONSERVATION DISTRICT SHALL BE NOTIFIED, IN WRITING, FOR THE SALE OF ANY PORTION OF THE PROJECT OR FOR THE SALE OF INDIVIDUAL LOTS. NEW OWNERS' INFORMATION SHALL BE PROVIDED. ADDITIONAL MEASURES DEEMED NECESSARY BY DISTRICT OFFICIALS SHALL BE IMPLEMENTED AS CONDITIONS WARRANT.

DRAINAGE NARRATIVE

1. THE PROJECT IS NOT CONSIDERED A MAJOR DEVELOPMENT PER NJAC 7:8-1.2 AS IT DOES NOT:
   - 1.1. DISTURB MORE THAN ONE ACRE OF LAND
   - 1.2. CREATE ONE-QUARTER ACRE OR MORE OF REGULATED IMPERVIOUS SURFACE, OR
   - 1.3. CREATE ONE-QUARTER ACRE OR MORE OF REGULATED MOTOR VEHICLE SURFACE.
2. SINCE THE PROJECT IS NOT CONSIDERED A MAJOR DEVELOPMENT, THE PROJECT IS NOT SUBJECT TO ANY GROUNDWATER RECHARGE OR STORMWATER QUALITY REQUIREMENTS AS PER NJAC 7:8.
3. THE PROJECT DOES NOT INCREASE IMPERVIOUS COVERAGE ON SITE MAINTAINING THE SAME SITE COVERAGE AS EXISTING CONDITIONS. AS SUCH, NO PROPOSED STORMWATER DETENTION IS REQUIRED.

LEGEND

- BUILDING DOOR
- PROPOSED PAVERS
- PROPOSED WALL
- LIMIT OF DISTURBANCE
- SILT FENCE
- 23 — EXISTING CONTOUR
- 24 — PROPOSED CONTOUR

TOTAL LIMIT OF DISTURBANCE: 2,994 SF / 0.069 ACRES
PROJECT IS EXEMPT FROM SOIL CONSERVATION DISTRICT APPROVAL AS IT DISTURBS LESS THAN 5,000 SF

THIS PROJECT IS EXEMPT FROM SOIL COMPACTION TESTING SINCE IT IS LOCATED IN THE METROPOLITAN PLANNING AREA (PA-1) ZONE.

MAP REFERENCES

1) BOUNDARY AND TOPOGRAPHIC DATA SHOWN HEREIN WAS OBTAINED FROM A PLAN ENTITLED "BOUNDARY AND PARTIAL TOPOGRAPHIC SURVEY, SETON HALL PREPARATORY SCHOOL, 120 NORTHFIELD AVENUE, TOWSNHIP OF WEST ORANGE, ESSEX COUNTY, NEW JERSEY, BLOCK 59.04, LOT 1.01" PREPARED BY E2 PROJECT MANAGEMENT, LLC, DATED JULY 25, 2022.

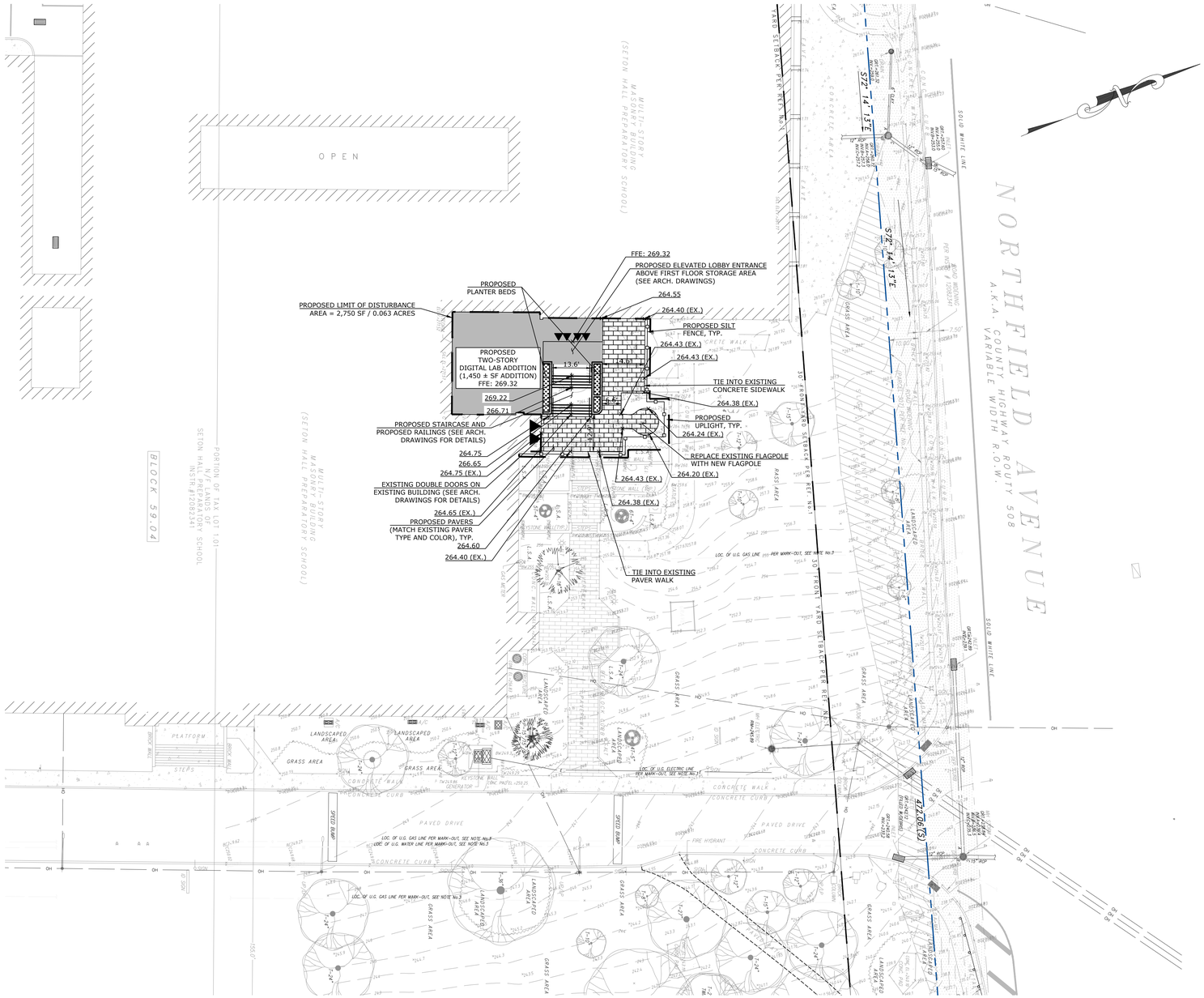

SCHEDULE OF REVISIONS				
REV.	DATE	DESCRIPTION OF CHANGES	DRAWN BY	CHK. BY

OWNER
SETON HALL PREPARATORY SCHOOL
120 NORTHFIELD AVENUE
TOWNSHIP OF WEST ORANGE, NJ 07052

APPLICANT
SETON HALL PREPARATORY SCHOOL
120 NORTHFIELD AVENUE
TOWNSHIP OF WEST ORANGE, NJ 07052

E 2 PROJECT MANAGEMENT LLC

87 HIBERNIA AVENUE
ROCKAWAY, N.J. 07866
PHONE: (973) 299-5200
FAX: (973) 299-5059
www.E2PM.com

THIS DRAWING DOES NOT INCLUDE NECESSARY COMPONENTS FOR CONSTRUCTION SAFETY. ALL CONSTRUCTION MUST BE DONE IN COMPLIANCE WITH THE OCCUPATIONAL SAFETY AND HEALTH ACT OF 1970 AND ALL RULES AND REGULATIONS THERETO APPURTENANT. THIS DRAWING AND THE DESIGN FEATURES OR CONSTRUCTION DISCLOSED ARE PROPRIETARY TO E2 PROJECT MANAGEMENT LLC AND SHALL NOT BE REPRODUCED, ALTERED OR COPIED WITHOUT WRITTEN PERMISSION, SHALL NOT BE USED IN ANY MANNER DETRIMENTAL TO ITS INTEREST AND SHALL BE RETURNED UPON REQUEST.

N.J. ENGINEERING CERTIFICATE OF AUTHORIZATION No. 24GA28118200

I CERTIFY THAT THESE PLANS HAVE BEEN PREPARED UNDER MY SUPERVISION

STATE OF NEW JERSEY · CHARLES J. STEWART · No. GB35884 · LICENSED · PROFESSIONAL ENGINEER & LAND SURVEYOR

Digitally signed by Charles Stewart
Date: 2023.09.07 10:37:45 -04'00'

CHARLES J. STEWART, P.E., P.L.S.
NJ REGISTERED PROFESSIONAL ENGINEER LICENSE AND
NJ PROFESSIONAL LAND SURVEYOR LICENSE NO. 24GB035884

PROJECT NAME

SETON HALL PREPARATORY SCHOOL
PROPOSED DIGITAL LAB AND ENTRY

120 NORTHFIELD AVENUE
TOWNSHIP OF WEST ORANGE
ESSEX COUNTY, NEW JERSEY
TAX BLOCK 59.04, LOT 1.01

DRAWING TITLE

SITE PLAN

CHECKED BY: CJS	DRAWN BY: ENS
SCALE: 1" = 20'	SHEET NO:
PROJECT #: P-22-70-01	FIRST ISSUE: 9/06/2023

DRAWING NO.

SP-103.10

PERMANENT VEGETATIVE COVER FOR SOIL STABILIZATION

SITE PREPARATION

1. GRADE AS NEEDED AND FEASIBLE TO PERMIT THE USE OF CONVENTIONAL EQUIPMENT FOR SEEDBED PREPARATION, SEEDING, MULCH APPLICATION, AND MULCH ANCHORING. ALL GRADING SHOULD BE DONE IN ACCORDANCE WITH STANDARD FOR LAND GRADING.
2. IMMEDIATELY PRIOR TO SEEDING AND TOPSOIL APPLICATION, THE SUBSOIL SHALL BE EVALUATED FOR COMPACTION IN ACCORDANCE WITH THE STANDARD FOR LAND GRADING .
3. TOPSOIL SHOULD BE HANDLED ONLY WHEN IT IS DRY ENOUGH TO WORK WITHOUT DAMAGING THE SOIL STRUCTURE. A UNIFORM APPLICATION TO A DEPTH OF 5 INCHES (UNSETTLED) IS REQUIRED ON ALL SITES. TOPSOIL SHALL BE AMENDED WITH ORGANIC MATTER, AS NEEDED, IN ACCORDANCE WITH THE STANDARD FOR TOPSOILING.
4. INSTALL NEEDED EROSION CONTROL PRACTICES OR FACILITIES SUCH AS DIVERSIONS, GRADE-STABILIZATION STRUCTURES, CHANNEL STABILIZATION MEASURES, SEDIMENT BASINS, AND WATERWAYS.

SEEDBED PREPARATION

1. UNIFORMLY APPLY GROUND LIMESTONE AND FERTILIZER TO TOPSOIL WHICH HAS BEEN SPREAD AND FIRMED, ACCORDING TO SOIL TEST RECOMMENDATIONS SUCH AS OFFERED BY RUTGERS CO-OPERATIVE EXTENSION SOIL SAMPLE MAILERS ARE AVAILABLE FROM THE LOCAL RUTGERS COOPERATIVE EXTENSION OFFICES (HTTP://NJAES.RUTGERS.EDU/COUNTY/). FERTILIZER SHALL BE APPLIED AT THE RATE OF 500 POUNDS PER ACRE OR 11 POUNDS PER 1,000 SQUARE FEET OF 10-10-10 OR EQUIVALENT WITH 50% WATER INSOLUBLE NITROGEN UNLESS A SOIL TEST INDICATES OTHERWISE AND INCORPORATED INTO THE SURFACE 4 INCHES. IF FERTILIZER IS NOT INCORPORATED, APPLY ONE-HALF THE RATE DESCRIBED ABOVE DURING SEEDBED PREPARATION AND REPEAT ANOTHER ONE-HALF RATE APPLICATION OF THE SAME FERTILIZER WITHIN 3 TO 5 WEEKS AFTER SEEDING.
2. WORK LIME AND FERTILIZER INTO THE TOPSOIL AS NEARLY AS PRACTICAL TO A DEPTH OF 4 INCHES WITH 4-1 STANDARDS FOR SOIL EROSION AND SEDIMENT CONTROL IN NEW JERSEY JANUARY 2014 A DISC, SPRING-TOOTH HARROW, OR OTHER SUITABLE EQUIPMENT. THE FINAL HARROWING OR DISKING OPERATION SHOULD BE ON THE GENERAL CONTOUR. CONTINUE TILLAGE UNTIL A REASONABLE UNIFORM SEEDBED IS PREPARED.
3. HIGH ACID PRODUCING SOIL. SOILS HAVING A PH OF 4 OR LESS OR CONTAINING IRON SULFIDE SHALL BE COVERED WITH A MINIMUM OF 12 INCHES OF SOIL HAVING A PH OF 5 OR MORE BEFORE INITIATING SEEDBED REPARATION. SEE STANDARD FOR MANAGEMENT OF HIGH ACID-PRODUCING SOILS FOR SPECIFIC REQUIREMENTS.

SEEDING

1. SELECT A MIXTURE FROM TABLE 4-3 OR USE A MIXTURE RECOMMENDED BY RUTGERS COOPERATIVE EXTENSION OR NATURAL RESOURCES CONSERVATION SERVICE WHICH IS APPROVED BY THE SOIL CONSERVATION DISTRICT. SEED GERMINATION SHALL HAVE BEEN TESTED WITHIN 12 MONTHS OF THE PLANTING DATE. NO SEED SHALL BE ACCEPTED WITH A GERMINATION TEST DATE MORE THAN 12 MONTHS OLD UNLESS RETESTED.
   1.1. SEEDING RATES SPECIFIED ARE REQUIRED WHEN A REPORT OF COMPLIANCE IS REQUESTED PRIOR TO ACTUAL ESTABLISHMENT OF PERMANENT VEGETATION. UP TO 50% REDUCTION IN RATES MAY BE USED WHEN PERMANENT VEGETATION IS ESTABLISHED PRIOR TO A REPORT OF COMPLIANCE INSPECTION. THESE RATES APPLY TO ALL METHODS OF SEEDING. ESTABLISHING PERMANENT VEGETATION MEANS 80% VEGETATIVE COVERAGE WITH THE SPECIFIED SEED MIXTURE FOR THE SEEDED AREA AND MOWED ONCE.
   1.2. WARM-SEASON MIXTURES ARE GRASSES AND LEGUMES WHICH MAXIMIZE GROWTH AT HIGH TEMPERATURES, GENERALLY 85O F AND ABOVE. SEE TABLE 4-3 MIXTURES 1 TO 7. PLANTING= RATES FOR WARM-SEASON GRASSES SHALL BE THE AMOUNT OF PURE LIVE SEED (PLS) AS DETERMINED BY GERMINATION TESTING RESULTS.
   1.3. COOL-SEASON MIXTURES ARE GRASSES AND LEGUMES WHICH MAXIMIZE GROWTH AT TEMPERATURES BELOW 85O MANY GRASSES BECOME ACTIVE AT 65O SEE TABLE 4-3, MIXTURES 8-20. ADJUSTMENT OF PLANTING RATES TO COMPENSATE FOR THE AMOUNT OF PLS IS NOT REQUIRED FOR COOL SEASON GRASSES.
2. CONVENTIONAL SEEDING IS PERFORMED BY APPLYING SEED UNIFORMLY BY HAND, CYCLONE (CENTRIFUGAL) SEEDER, DROP SEEDER, DRILL OR CULTIPACKER SEEDER. EXCEPT FOR DRILLED, HYDROSEEDED OR CULTIPACKED SEEDINGS, SEED SHALL BE INCORPORATED INTO THE SOIL WITHIN 24 HOURS OF SEEDBED PREPARATION TO A DEPTH OF 1/4 TO 1/2 INCH, BY RAKING OR DRAGGING. DEPTH OF SEED PLACEMENT MAY BE 1/4 INCH DEEPER ON COARSE-TEXTURED SOIL.
3. AFTER SEEDING, FIRMING THE SOIL WITH A CORRUGATED ROLLER WILL ASSURE GOOD SEED-TO-SOIL CONTACT, RESTORE CAPILLARITY, AND IMPROVE SEEDLING EMERGENCE. THIS IS THE PREFERRED METHOD. WHEN PERFORMED ON THE CONTOUR, SHEET EROSION WILL BE MINIMIZED AND WATER CONSERVATION ON SITE WILL BE MAXIMIZED.
4. HYDROSEEDING IS A BROADCAST SEEDING METHOD USUALLY INVOLVING A TRUCK, OR TRAILER-MOUNTED TANK, WITH AN AGITATION SYSTEM AND HYDRAULIC PUMP FOR MIXING SEED, WATER AND FERTILIZER AND SPRAYING THE MIX ONTO THE PREPARED SEEDBED. MULCH SHALL NOT BE INCLUDED IN THE TANK WITH SEED. SHORTFIBERED MULCH MAY BE APPLIED WITH A HYDROSEEDER FOLLOWING SEEDING. (ALSO SEE SECTION 4-MULCHING BELOW). HYDROSEEDING IS NOT A PREFERRED SEEDING METHOD BECAUSE SEED AND FERTILIZER ARE APPLIED TO THE SURFACE AND NOT INCORPORATED INTO THE SOIL. WHEN POOR SEED TO SOIL CONTACT OCCURS, THERE IS A REDUCED SEED GERMINATION AND GROWTH.

SITE IS LOCATED WITHIN ZONE 6B

PERMANENT VEGETATIVE MIXTURES, PLANTING RATES AND PLANTING DATES

SEED MIXTURE	PLANTING RATES		PLANTING DATES (O - OPTIMAL PLANTING PERIOD, A - ACCEPTABLE PLANTING PERIOD) — PLANT HARIDNESS ZONE									MAINTENANCE LEVEL	REMARKS
			ZONE 5B, 6A			ZONE 6B			ZONE 7A, 7B				
	LBS/ ACRE	LBS/1000 SQ.FT.	3/15 -5/31	6/1 -7/31	8/1 -10/1	3/1 -4/30	5/1 -8/14	8/15 -10/15	2/1 -4/30	5/1 -8/14	8/15 -10/30		
WARM SEASON MIXTURE #4													
SWITCHGRASS	10	.25	O			O			O			C-D	NATIVE WARM SEASON MIXTURE
BIG BLUESTEM	5	.10											
LITTLE BLUESTEM	5	.10											
SAND LOVEGRASS	4	.10											
COSTAL PANICGRASS	10	.20											
COOL SEASON MIXTURE #7													
STRONG CREEPING RED FESCUE	130	3	A	A	O	A	A	O	A	A	O	B-D	SUITABLE WATERWAY MIX. CANADA BLUEGRASS MORE DROUGHT TOLERANT USE REDTOP FOR INCREASED DROUGHT TOLERANCE
KENTUCKY BLUEGRASS	50	1											
PERENNIAL RYEGRASS OR	20	.60											
REDTOP	10	.25											
PLUS WHITE CLOVER	5	.10											

DUST CONTROL METHODS:

THE FOLLOWING METHODS SHOULD BE CONSIDERED FOR CONTROLLING DUST:
MULCHES - SEE STANDARD OF STABILIZATION WITH MULCHES
VEGETATIVE COVER - SEE TEMPORARY AND PERMANENT VEGETATIVE COVER STANDARDS
SPRAY ON ADHESIVES - ON MINERAL SOILS (NOT EFFECTIVE ON MUCK SOILS). KEEP TRAFFIC OFF THESE AREAS.

DUST CONTROL MATERIAL

MATERIAL	WATER DELUSION	TYPE OF NOZZLE	APPLY GALLONS/ACRE
ANIONIC ASPHALT EMULSION	7:1	COARSE SPRAY	1200
LATEX EMULSION	12.5:1	FINE SPRAY	235
RESIN IN WATER	4:1	FINE SPRAY	300
POLYACRYLAMIDE (PAM)- SPRAY ON POLYACRYLAMIDE (PAM)- DRY SPRAY	APPLY ACCORDING TO MANUFACTURER'S INSTRUCTIONS. MAY ALSO BE USED AS AN ADDITIVE TO SEDIMENT BASINS TO FLOCCULATE AND PRECIPITATE SUSPENDED COLLOIDS.		
ACIDULATED SOY BEAN SOAP STICK	NONE	COARSE SPRAY	1200

TILLAGE - TO ROUGHEN SURFACE AND BRING CLODS TO THE SURFACE. THIS IS TEMPORARY EMERGENCY MEASURE WHICH SHOULD BE USED BEFORE SOIL BLOWING STARTS. BEGIN PLOWING ON WINDWARD SIDE OF SITE. CHISEL - TYPE PLOWS ABOUT 12 INCHES APART AND SPRING-TOOTHED HARROWS ARE EXAMPLES OF EQUIPMENT WHICH MAY PRODUCE DESIRED EFFECT.

SPRINKLING - SITE IS SPRINKLED UNTIL THE SURFACE IS WET.

BARRIERS - SOLID BOARD FENCE, SNOW FENCES, BURLAP FENCES, BALES OF HAY OR SIMILAR MATERIAL CAN BE USED TO CONTROL AIR CURRENTS AND SOIL BLOWING.

CALCIUM CHLORIDE - SHALL BE IN THE FORM OF LOOSE, DRY GRANULES OR FLAKES FINE ENOUGH TO FEED THROUGH COMMONLY USED SPREADERS AT A RATE THAT WILL KEEP SURFACE MOIST BUT NOT CAUSE POLLUTION OR PLANT DAMAGE. IF USED ON STEEPER SLOPES, THEN USE OTHER PRACTICES TO PREVENT WASHING INTO STREAMS OR ACCUMULATION AROUND PLANTS.

STONE - COVER SURFACE WITH CRUSHED STONE OR COARSE GRAVEL.

TEMPORARY VEGETATIVE COVER FOR SOIL STABILIZATION

SITE PREPARATION

1. GRADE AS NEEDED AND FEASIBLE TO PERMIT THE USE OF CONVENTIONAL EQUIPMENT FOR SEEDBED PREPARATION, SEEDING, MULCH APPLICATION, AND MULCH ANCHORING. ALL GRADING SHOULD BE DONE IN ACCORDANCE WITH STANDARD FOR LAND GRADING (19-1 OF STANDARDS FOR SOIL EROSION AND SEDIMENT CONTROL IN NEW JERSEY).
2. INSTALL NEEDED EROSION CONTROL PRACTICES OR FACILITIES SUCH AS DIVERSIONS, GRADE-STABILIZATION STRUCTURES, CHANNEL STABILIZATION MEASURES, SEDIMENT BASINS, AND WATERWAYS. SEE STANDARDS 11 THROUGH 42 IN STANDARDS FOR SOIL EROSION AND SEDIMENT CONTROL IN NEW JERSEY.
3. IMMEDIATELY PRIOR TO SEEDING THE SURFACE SHOULD BE SCARIFIED 6" TO 12" WHERE THERE HAS BEEN SOIL COMPACTION. THIS PRACTICE IS PERMISSIBLE ONLY WHERE THERE IS NO DANGER TO UNDERGROUND UTILITIES (CABLES, IRRIGATION SYSTEMS, ETC.)

SEEDBED PREPARATION

1. APPLY GROUND LIMESTONE AND FERTILIZER ACCORDING TO SOIL TEST RECOMMENDATIONS SUCH AS OFFERED BY RUTGERS CO-OPERATIVE EXTENSION. SOIL SAMPLE MAILERS ARE AVAILABLE FROM THE LOCAL RUTGERS COOPERATIVE EXTENSION OFFICES (HTTP://NJAES.RUTGERS.EDU/COUNTY/). FERTILIZER SHALL BE APPLIED AT THE RATE OF 500 POUNDS PER ACRE OR 11 POUNDS PER 1,000 SQUARE FEET OF 10-20-10 OR EQUIVALENT WITH 50% WATER INSOLUBLE NITROGEN UNLESS A SOIL TEST INDICATES OTHERWISE. CALCIUM CARBONATE IS THE EQUIVALENT AND STANDARD FOR MEASURING THE ABILITY OF LIMING MATERIALS TO NEUTRALIZE SOIL ACIDITY AND SUPPLY CALCIUM AND MAGNESIUM TO GRASSES AND LEGUMES.
2. WORK LIME AND FERTILIZER INTO THE SOIL AS NEARLY AS PRACTICAL TO A DEPTH OF 4 INCHES WITH A DISC, SPRING-TOOTH HARROW, OR OTHER SUITABLE EQUIPMENT. THE FINAL HARROWING OR DISKING OPERATION SHOULD BE ON THE GENERAL CONTOUR. CONTINUE TILLAGE UNTIL A REASONABLE UNIFORM SEEDBED IS PREPARED.
3. INSPECT SEEDBED JUST BEFORE SEEDING. IF TRAFFIC HAS LEFT THE SOIL COMPACTED, THE AREA MUST BE RETILLED IN ACCORDANCE WITH THE ABOVE.
4. SOILS HIGH IN SULFIDES OR HAVING A pH OF 4 OR LESS REFER TO STANDARD FOR MANAGEMENT OF HIGH ACID PRODUCING SOILS, PAGE 1-1 IN THE STANDARD FOR SOIL EROSION AND SEDIMENT CONTROL IN NEW JERSEY.

SEEDING

1. SELECT SEED FROM RECOMMENDATIONS IN TABLE 7-2 SHOWN BELOW:
2. CONVENTIONAL SEEDING: APPLY SEED UNIFORMLY BY HAND, CYCLONE (CENTRIFUGAL) SEEDER, DROP SEEDER, DRILL OR CULTIPACKER SEEDER. EXCEPT FOR DRILLED, HYDROSEEDED OR CULTIPACKED SEEDINGS, SEED SHALL BE INCORPORATED INTO THE SOIL TO A DEPTH OF 1/4 TO 1/2 INCH, BY RAKING OR DRAGGING. DEPTH OF SEED PLACEMENT MAY BE 1/4 INCH DEEPER ON COARSE-TEXTURED SOIL.
3. HYDROSEEDING IS A BROADCAST SEEDING METHOD USUALLY INVOLVING A TRUCK, OR TRAILER-MOUNTED TANK, WITH AN AGITATION SYSTEM AND HYDRAULIC PUMP FOR MIXING SEED, WATER AND FERTILIZER AND SPRAYING THE MIX ONTO THE PREPARED SEEDBED. MULCH SHALL NOT BE INCLUDED IN THE TANK WITH SEED. SHORT FIBERED MULCH MAY BE APPLIED WITH A HYDROSEEDER FOLLOWING SEEDING. (ALSO SEE SECTION 4-MULCHING BELOW). HYDROSEEDING IS NOT A PREFERRED SEEDING METHOD BECAUSE SEED AND FERTILIZER ARE APPLIED TO THE SURFACE AND NOT INCORPORATED INTO THE SOIL. POOR SEED TO SOIL CONTACT OCCURS REDUCING SEED GERMINATION AND GROWTH. HYDROSEEDING MAY BE USED FOR AREAS TOO STEEP FOR CONVENTIONAL EQUIPMENT TO TRAVERSE OR TOO OBSTRUCTED WITH ROCKS, STUMPS, ETC.
4. AFTER SEEDING, FIRMING THE SOIL WITH A CORRUGATED ROLLER WILL ASSURE GOOD SEED-TO-SOIL CONTACT, RESTORE CAPILLARITY, AND IMPROVE SEEDLING EMERGENCE. THIS IS THE PREFERRED METHOD. WHEN PERFORMED ON THE CONTOUR, SHEET EROSION WILL BE MINIMIZED AND WATER CONSERVATION ON SITE WILL BE MAXIMIZED.

MULCHING

1. MULCHING IS REQUIRED ON ALL SEEDING. MULCH WILL INSURE AGAINST EROSION BEFORE GRASS IS ESTABLISHED AND WILL PROMOTE FASTER AND EARLIER ESTABLISHMENT. THE EXISTENCE OF VEGETATION SUFFICIENT TO CONTROL SOIL EROSION SHALL BE DEEMED COMPLIANCE WITH THIS MULCHING REQUIREMENT.
2. STRAW OR HAY: UNROTTED SMALL GRAIN STRAW, HAY FREE OF SEEDS, APPLIED AT THE RATE OF 1-1/2 TO 2 TONS PER ACRE (70 TO 90 POUNDS PER 1,000 SQUARE FEET), EXCEPT THAT WHERE A CRIMPER IS USED INSTEAD OF A LIQUID MULCH-BINDER (TACKIFYING OR ADHESIVE AGENT) THE RATE OF APPLICATION IS 3 TONS PER ACRE. MULCH CHOPPER-BLOWERS MUST NOT GRIND THE MULCH. HAY MULCH IS NOT RECOMMENDED FOR ESTABLISHED FINE TURF OR LAWNS DUE TO THE PRESENCE OF WEED SEED.
3. APPLICATION: SPREAD UNIFORMLY BY HAND OR MECHANICALLY SO THAT APPROXIMATELY 95% OF THE SOIL SURFACE WILL BE COVERED. FOR UNIFORM DISTRIBUTION OF HAND-SPREAD MULCH, DIVIDE AREA INTO APPROXIMATELY 1,000 SQUARE FEET SECTIONS AND DISTRIBUTE 70 TO 90 POUNDS WITHIN EACH SECTION.
4. ANCHORING SHALL BE ACCOMPLISHED IMMEDIATELY AFTER PLACEMENT TO MINIMIZE LOSS BY WIND OR WATER. THIS MAY BE DONE BY ONE OF THE FOLLOWING METHODS, DEPENDING UPON THE SIZE OF HTE AREA, STEEPNESS OF SLOPE, AND COSTS:
   4.1. PEG AND TWINE. DRIVE 8 TO 10 INCH WOODEN PEGS TO WITHIN 2 TO 3 INCHES OF THE SOIL SURFACE EVERY 4 FEET IN ALL DIRECTIONS. STAKES MAY BE DRIVEN BEFORE OR AFTER APPLYING MULCH. SECURE MULCH TO SOIL SURFACE BY STRETCHING TWICE BETWEEN PEGS IN A CRIS-CROSS AND A SQUARE PATTERN. SECURE TWINE AROUND EACH PEG WITH TWO OR MORE ROUND TURNS.
   4.2. MULCH NETTINGS. STAPLE PAPER, JUTE, COTTON, OR PLASTIC NETTINGS TO THE SOIL SURFACE. USE A DEGRADABLE NETTING IN AREAS TO BE MOWED.
   4.3. CRIMPER (MULCH ANCHORING TOOL). A TRACTOR-DRAWN IMPLEMENT, SOMEWHAT LIKE A DISC HARROW, ESPECIALLY DESIGNED TO PUSH OR CUT SOME OF THE BROADCAST LONG FIBER MULCH 3 TO 4 INCHES INTO THE SOIL SO AS TO ANCHOR IT AND LEAVE PART STANDING UPRIGHT. THIS TECHNIQUE IS LIMITED TO AREAS TRAVERSABLE BY A TRACTOR, WHICH MUST OPERATE ON THE CONTOUR OF SLOPES. STRAW MULCH RATE MUST BE 3 TONS PER ACRE. NO TACKIFYING OR ADHESIVE AGENT IS REQUIRED.
   4.4. LIQUID MULCH BINDERS MAY BE USED TO ANCHOR HAY OR STRAW MULCH.
   4.4.1. APPLICATIONS SHOULD BE HEAVIER AT EDGES WHERE WIND MAY CATCH MULCH, IN VALLEYS, AND AT CRESTS OF BANKS. THE REMAINDER OF THE AREA SHOULD BE UNIFORM IN APPEARANCE.
   4.4.2. USE ONE OF THE FOLLOWING:
   4.4.2.1. ORGANIC AND VEGETABLE BASED BINDERS - NATURALLY OCCURRING, POWDER BASED, HYDROPHILIC MATERIALS WHEN MIXED WITH WATER FORMULATES A GEL AND WHEN APPLIED TO MULCH UNDER SATISFACTORY CURING CONDITIONS WILL FORM MEMBRANED NETWORKS OF INSOLUBLE POLYMERS. THE VEGETABLE GEL SHALL BE PHYSIOLOGICALLY HARMLESS AND NOT RESULT IN A PHYTOTOXIC EFFECT OR IMPEDED GROWTH OF TURFGRASS. USE AT RATES AND WEATHER CONDITIONS AS RECOMMENDED BY THE MANUFACTURER TO ANCHOR MULCH MATERIALS. MANY NEW PRODUCTS ARE AVAILABLE, SOME OF WHICH MAY NEED FURTHER EVALUATION FOR USE IN THIS STATE.
   4.4.2.2. SYNTHETIC BINDERS - HIGH POLYMER SYNTHETIC EMULSION, MISCIBLE WITH WATER WHEN DILUTED AND FOLLOWING APPLICATION TO MULCH, DRYING, AND CURING SHALL NO LONGER BE SOLUBLE OR DISPERSIBLE IN WATER. IT SHALL BE APPLIED AT RATES RECOMMENDED BY THE MANUFACTURER AND REMAIN TACKY UNTIL GERMINATION OF GRASS.
   4.5. WOOD-FIBERED OR PAPER-FIBER MULCH. SHALL BE MADE FROM WOOD, PLANT FIBERS OR PAPER CONTAINING NO GROWTH GERMINATION INHIBITING MATERIALS, USED AT THE RATE OF 1,500 POUNDS PER ACRE (OR AS RECOMMENDED BY THE PROJECT MANUFACTURER) AND MAY BE APPLIED BY A HYDROSEEDER. THIS MULCH SHALL NOT BE MIXED IN THE TANK WITH SEED. USE IS LIMITED TO FLATTER SLOPES AND DURING OPTIMUM SEEDING PERIODS IN SPRING AND FALL.
   4.6. PELLETIZED MULCH. COMPRESSED AND EXTRUDED PAPER AND/OR WOOD FIBER PRODUCT, WHICH MAY CONTAIN CO-POLYMERS, TACKIFIERS, FERTILIZERS AND COLORING AGENTS. THE DRY PELLETS, WHEN APPLIED TO A SEEDED AREA NAD WATERED, FORM A MULCH MAT. PELLETIZED MULCH SHALL BE APPLIED IN ACCORDANCE WITH MANUFACTURERS RECOMMENDATIONS. MULCH MAY BE APPLIED BY HAND OR MECHANICAL SPREADER AT THE RATE OF 60-75 LBS/1000 SQUARE FEET AND ACTIVATED WITH 0.2 TO 0.4 INCHES OF WATER. THIS MATERIAL HAS BEEN FOUND TO BE BENEFICIAL FOR USE ON SMALL LAWN OR RENOVATION AREAS, SEEDED AREAS WHERE WEED-SEED FREE MULCH IS DESIRED OR ON SITES WHERE STRAW MULCH AND TACKIFIER AGENT ARE NOT PRACTICAL OR DESIRABLE. APPLYING THE FULL 0.2 TO 0.4 INCHES OF WATER AFTER SPREADING PELLETIZED MULCH ON THE SEED BED IS EXTREMELY IMPORTANT FOR SUFFICIENT ACTIVATION AND EXPANSION OF THE MULCH TO PROVIDE SOIL COVERAGE.

SITE IS LOCATED WITHIN ZONE 6B

TEMPORARY VEGETATIVE MIXTURES, PLANTING RATES AND PLANTING DATES

SEED MIXTURE	SEEDING RATES (1)		OPTIMUM SEEDING DATE (2) BASED ON PLANT HARDINESS ZONE (3) — PLANT HARDINESS ZONE			OPTIMUM SEED DEPTH (INCHES) (4)
	LBS/ ACRE	LBS/1000 SQ.FT.	ZONE 5B, 6S	ZONE 6B	ZONE 7A, 7B	
COOL SEASON GRASSES						
1. PERENNIAL RYEGRASS	100	1.0	3/15-6/1 & 8/1-9/15	3/1-5/15 & 8/15-10/1	2/15-5/1 & 8/15-10/15	0.5
2. SPRING OATS	86	2.0	3/15-6/1 & 8/1-9/15	3/1-5/15 & 8/15-10/1	2/15-5/1 & 8/15-10/15	1.0
3. WINTER BARLEY	96	2.2	8/1-9/15	8/15-10/1	28/15-10/15	1.0
4. ANNUAL RYEGRASS	100	1.0	3/15-6/1 & 8/1-9/15	3/15-6/1 & 8/1-9/15	2/15-5/1 & 8/15-10/15	0.5
5. WINTER CEREAL RYE	112	2.8	8/1-11/1	8/1-11/15	8/1-12/15	1.0
WARM SEASON GRASSES						
6. PEARL MILLET	20	0.5	6/1-8/1	5/15-8/15	5/1-9/1	1.0
7. MILLET (GERMAN OR HUNGARIAN)	30	0.7	6/1-8/1	5/15-8/15	5/1-9/1	1.0

1. SEEDING RATE FOR WARM SEASON GRASS, SELECTIONS 5-7 SHALL BE ADJUSTED TO REFLECT THE AMOUNT OF PURE LINE SEED (PLS) AS DETERMINED BY A GERMINATION TEST RESULT. NO ADJUSTMENT IS REQUIRED FOR COOL SEASON GRASSES.
2. MAY BE PLANTED THROUGHOUT SUMMER IF SOIL MOISTURE IS ADEQUATE OR SEED AREA CAN BE IRRIGATED.
3. PLANT HARDINESS ZONE (SEE FIGURE 7-1, PG 7-4 OF THE THE STANDARDS FOR EROSION AND SEDIMENT CONTROL IN NEW JERSEY
4. TWICE THE DEPTH FOR SANDY SOILS.

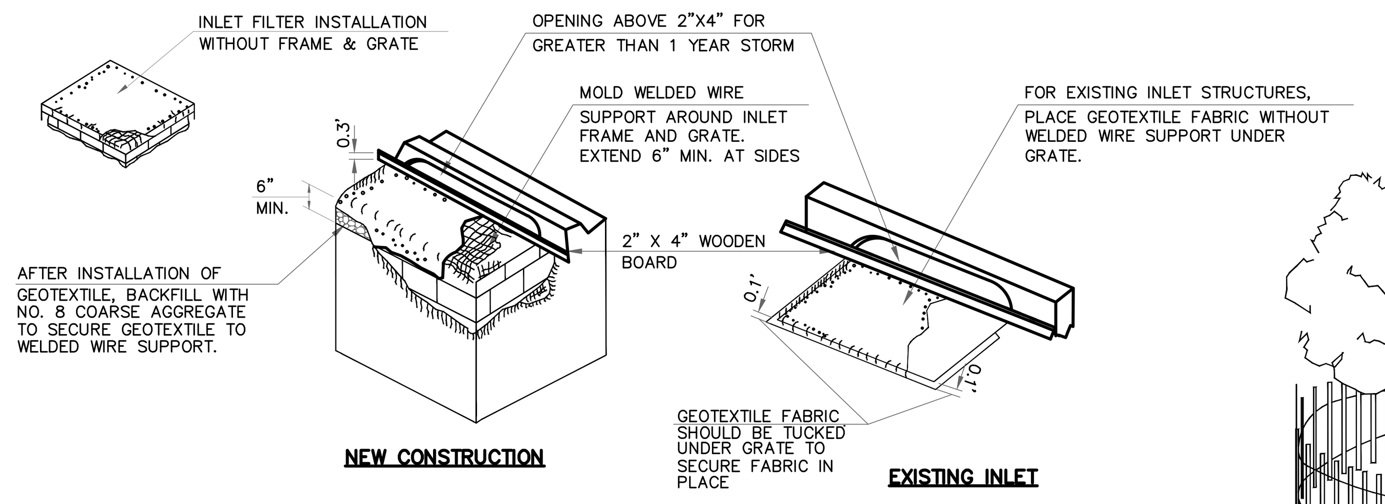

B-TYPE INLET FILTER

N.T.S.

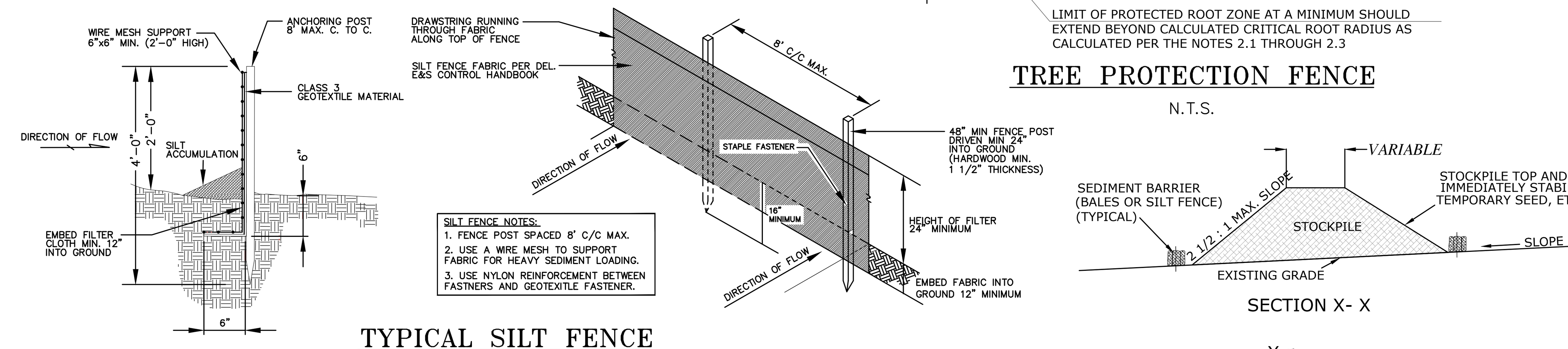

TYPICAL SILT FENCE

N.T.S.

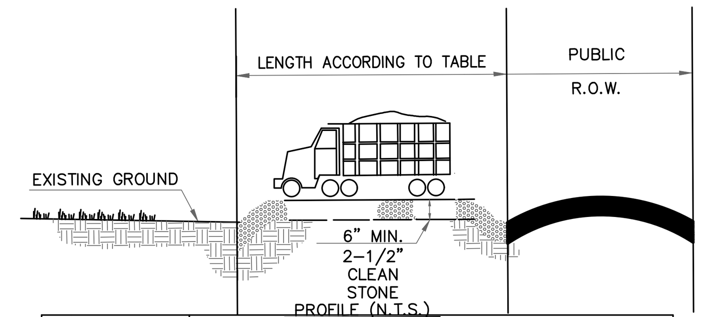

PERCENT SLOPE OF ROADWAY	LENGTH OF STONE REQUIRED	
	COURSE GRAINED SOILS	FINE GRAINED SOILS
0 TO 2%	50 FT	100 FT
2% TO 5%	100 FT	200 FT
>5%	ENTIRE SURFACE STABILIZED WITH FABC BASE COURSE [1]	

1. AS PRESCRIBED BY LOCAL ORDINANCE OR OTHER GOVERNING AUTHORITY.

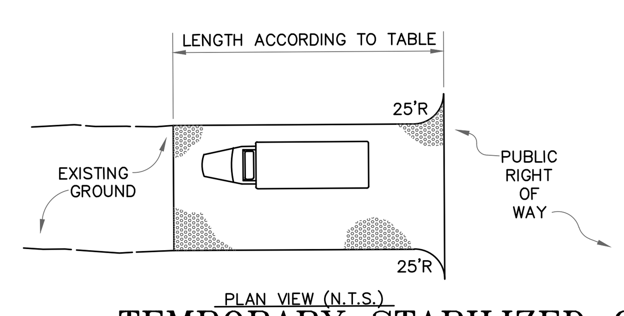

PROVIDE APPROPRIATE TRANSITION BETWEEN STABILIZED CONSTRUCTION ENTRANCE AND PUBLIC R.O.W.

TEMPORARY STABILIZED CONSTRUCTION ENTRANCE

N.T.S.

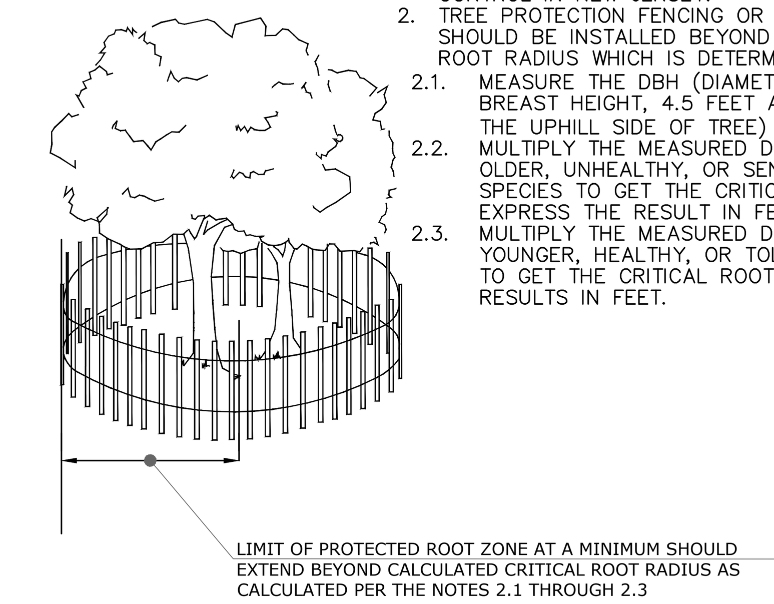

NOTE:

1. TREE PROTECTION DURING CONSTRUCTION SHALL BE IN ACCORDANCE WITH CHAPTER 9 – TREE PROTECTION DURING CONSTRUCTION OF THE STANDARDS FOR SOIL EROSION AND SEDIMENT CONTROL IN NEW JERSEY.
2. TREE PROTECTION FENCING OR OTHER BARRIER SHOULD BE INSTALLED BEYOND THE CRITICAL ROOT RADIUS WHICH IS DETERMINED AS FOLLOWS:
   2.1. MEASURE THE DBH (DIAMETER OF TREE AT BREAST HEIGHT, 4.5 FEET ABOVE GROUND ON THE UPHILL SIDE OF TREE) IN INCHES.
   2.2. MULTIPLY THE MEASURED DBH BY 1.5 FOR OLDER, UNHEALTHY, OR SENSITIVE TREE SPECIES TO GET THE CRITICAL ROOT RADIUS. EXPRESS THE RESULT IN FEET.
   2.3. MULTIPLY THE MEASURED DBH BY 1.0 FOR YOUNGER, HEALTHY, OR TOLERANT SPECIES TO GET THE CRITICAL ROOT RADIUS. EXPRESS RESULTS IN FEET.

TREE PROTECTION FENCE

N.T.S.

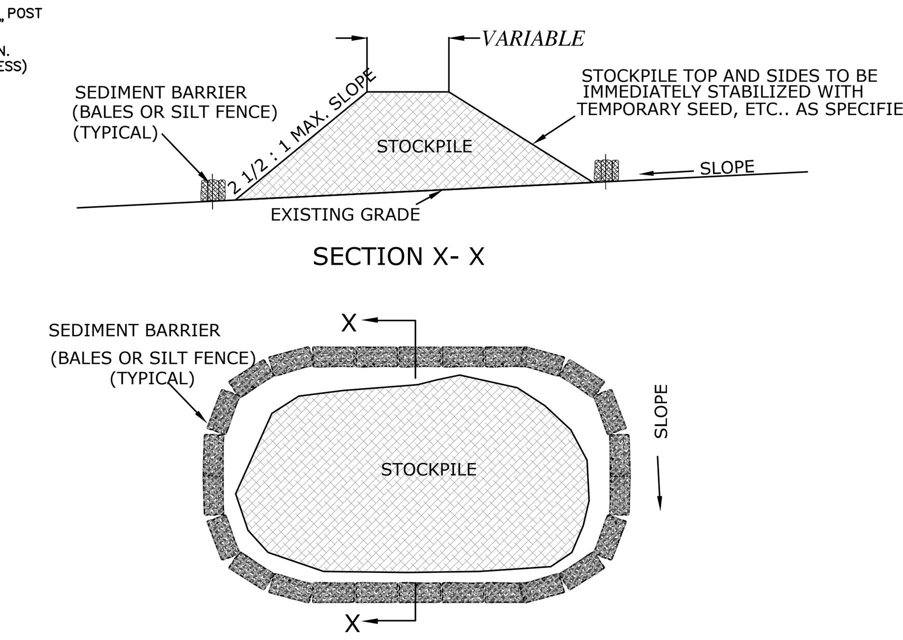

NOTES:
1. STOCKPILES TO BE PLACED AS DETERMINED IN THE FIELD.
2. STOCKPILES NOT TO BE PLACED IN AREA WITH CONCENTRATED FLOW, WETLANDS, EXTREME SLOPE, OR WITHIN 100 FEET OF A NATURAL STREAM.
3. TOPSOIL IS TO BE STOCKPILED SEPARATELY FROM OTHER EXCAVATED MATERIALS.

TYPICAL STOCKPILE CONSTRUCTION

N.T.S.

SCHEDULE OF REVISIONS

REV.	DATE	DESCRIPTION OF CHANGES	DRAWN BY	CHK. BY

OWNER
SETON HALL PREPARATORY SCHOOL
120 NORTHFIELD AVENUE
TOWNSHIP OF WEST ORANGE, NJ 07052

APPLICANT
SETON HALL PREPARATORY SCHOOL
120 NORTHFIELD AVENUE
TOWNSHIP OF WEST ORANGE, NJ 07052

E 2 PROJECT MANAGEMENT LLC
87 HIBERNIA AVENUE
ROCKAWAY, N.J. 07866
PHONE: (973) 299-5200
FAX: (973) 299-5059
www.E2PM.com

THIS DRAWING DOES NOT INCLUDE NECESSARY COMPONENTS FOR CONSTRUCTION SAFETY. ALL CONSTRUCTION MUST BE DONE IN COMPLIANCE WITH THE OCCUPATIONAL SAFETY AND HEALTH ACT OF 1970 AND ALL RULES AND REGULATIONS THERETO APPURTENANT. THIS DRAWING AND THE DESIGN FEATURES OR CONSTRUCTION DISCLOSED ARE PROPRIETARY TO E2 PROJECT MANAGEMENT LLC AND SHALL NOT BE REPRODUCED, ALTERED OR COPIED WITHOUT WRITTEN PERMISSION, SHALL NOT BE USED IN ANY MANNER DETRIMENTAL TO ITS INTEREST AND SHALL BE RETURNED UPON REQUEST.

N.J. ENGINEERING CERTIFICATE OF AUTHORIZATION No. 24GA28118200

I CERTIFY THAT THESE PLANS HAVE BEEN PREPARED UNDER MY SUPERVISION

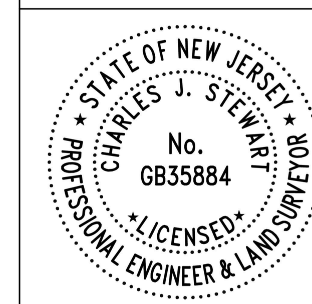

Digitally signed by Charles Stewart
Date: 2023.09.07 10:38:20 -04'00'

CHARLES J. STEWART, P.E., P.L.S.
NJ REGISTERED PROFESSIONAL ENGINEER LICENSE AND
NJ PROFESSIONAL LAND SURVEYOR LICENSE NO. 24GB035884

PROJECT NAME

SETON HALL PREPARATORY SCHOOL
PROPOSED DIGITAL LAB AND ENTRY

120 NORTHFIELD AVENUE
TOWNSHIP OF WEST ORANGE
ESSEX COUNTY, NEW JERSEY
TAX BLOCK 59.04, LOT 1.01

DRAWING TITLE

SOIL EROSION AND SEDIMENT CONTROL NOTES AND DETAILS

CHECKED BY: CJS	DRAWN BY: ENS
SCALE: NOT TO SCALE	SHEET NO:
PROJECT #: P-22-70-01	FIRST ISSUE: 9/06/2023

DRAWING NO.

SP-110.00

PLANTING NOTES:

1. THE LANDSCAPE PLAN IS TO BE USED FOR LANDSCAPING PURPOSES ONLY. THE CONTRACTOR SHOULD EXAMINE ALL ENGINEERING DRAWINGS AND FIELD CONDITIONS FOR EXACT LOCATIONS OF UTILITIES, DRAINS, ETC., AND NOTIFY THE OWNER ABOUT ANY DISCREPANCIES BEFORE STARTING WORK.
2. ALL PLANT MATERIALS USED SHALL BE TRUE TO NAME AND SIZE IN CONFORMITY WITH THE CURRENT EDITION OF THE AMERICAN STANDARD OF NURSERY STOCK AND SHALL BE TYPICAL OF THEIR SPECIES OR VARIETY. ALL PLANTS SHALL HAVE NORMAL, WELL-DEVELOPED BRANCHES AND VIGOROUS ROOT SYSTEMS. THEY SHALL BE SOUND, HEALTHY, VIGOROUS, FREE FROM DEFECTS, DISFIGURING KNOTS, ABRASIONS OF THE BARK, SUN SCALD INJURIES, PLANT DISEASES, INSECT EGGS, BORERS, AND ALL OTHER FORMS OF INFECTION. ALL PLANTS SHALL BE NURSERY GROWN. UTILITIES
3. THE CONTRACTOR WILL BE HELD RESPONSIBLE FOR ANY DAMAGE TO EXISTING CAUSED BY ANY PERSON, VEHICLE, EQUIPMENT, OR TOOLS RELATED TO THE EXECUTION OF THIS CONTRACT.
4. EXCAVATION NEAR EXISTING UTILITIES TO BE CAREFULLY PERFORMED BY HAND.
5. ALL PLANT MATERIAL SHALL BEAR THE SAME RELATION TO FINISHED GRADE AS IT GRADE AT THE NURSERY. BORE TO EXISTING
6. IN THE EVENT THAT PLANTING DISCREPANCIES OR MATERIAL OMISSIONS OCCUR IN THE PLANT MATERIALS LIST, THE LANDSCAPING PLAN SHALL GOVERN.
7. ALL PLANT MATERIAL IS TO BE GUARANTEED FOR A PERIOD OF TWELVE MONTHS FROM TIME OF FINAL ACCEPTANCE OF THE PROJECT OR AS REGULATED BY THE APPROVING AUTHORITY. IF ANY PLANTS ARE DEAD OR IN AN UNHEALTHY CONDITION BEFORE FINAL ACCEPTANCE OF THE PROJECT, THE LANDSCAPE CONTRACTOR SHALL REPLACE THEM AT HIS EXPENSE.
8. ANY SUBSTITUTIONS OF PLANT MATERIAL WITH REGARDS TO SIZE, SPECIES, VARIETY, ETC., SHALL BE SUBJECT TO APPROVAL BY THE PROJECT LANDSCAPE ARCHITECT AND THE TOWNSHIP.
9. PLANTS SHALL ONLY BE INSTALLED WHEN THE SOIL IS FROST FREE.
10. UNDER NO CIRCUMSTANCES SHOULD THE MAIN LEADER OF AN EVERGREEN TREE BE TOPPED.
11. ALL DISTURBED AREAS TO BE TOPSOILED 5" THICK, FERTILIZED, SEEDED, AND MULCHED WITH SALT HAY. TOPSOIL SHALL BE NATURAL FRIABLE, FERTILE SOIL CHARACTERISTIC OF PRODUCTIVE SOIL IN THE VICINITY. IT SHALL BE FREE OF LUMPS OF CLAY, STONES, ROOTS, AND OTHER FOREIGN MATTER.
12. CUT AND REMOVE BURLAP FROM TOP ONE-THIRD OF BALL. ALL PLASTIC MATERIAL, SYNTHETIC BURLAP AND STRING OR CONTAINERS SHALL BE REMOVED AT THE TIME OF PLANTING. THE WIRE BASKETS AND PLASTIC LINERS OF CONTAINER GROWN TREES AND SHRUBS MUST BE COMPLETELY REMOVED. NO CONTAINER GROWN MATERIAL WILL BE ACCEPTED IF IT IS ROOT BOUND.
13. THE DEPTH OF PLANT PITS SHALL BE INCREASED BY 12" THROUGH THE ADDITION OF LOOSE AGGREGATE (3/4" TO 1 1/2" DIAMETER) WHEREVER POOR DRAINAGE OCCURS OR WHERE DIRECTED BY THE PROJECT LANDSCAPE ARCHITECT.
14. GUY WIRES SHALL BE LOCATED SO THAT THEY WILL NOT PULL CROTCH APART. GUY WIRES TO SECOND BRANCH (MINIMUM ONE-THIRD HEIGHT OF TREE). USE TWO GUYS PER TREE UNLESS OTHERWISE INDICATED. TREE STAKES AND GUY WIRES SHALL BE REMOVED AFTER ONE GROWING SEASON.
15. PLANTS PLANTED IN ROWS SHALL BE MATCHED SPECIMENS AND BE UNIFORM IN SIZE AND FORM.
16. PLANTING BACKFILL MIXTURE SHALL CONSIST OF ONE PART TOPSOIL, ONE PART NATIVE SOIL AND ONE PART PEAT MOSS. NOTE THAT PLANTING MIXTURE MAY CHANGE BASED UPON SOIL CONDITIONS.
17. MULCH, 4" IN DEPTH, SHALL BE EITHER WOOD CHIPS, PINE BARK, OR SHREDDED RETARDANT HARDWOOD BARK NOT EXCEEDING 2" IN GREATEST DIMENSION. A WEED BARRIER SHALL BE USED IN ALL NON GRASSED AREA.
18. ALL PLANT MATERIAL SHALL BE GIVEN A MINIMUM OF 5 GALLONS OF WATER AT THE TIME OF INSTALLATION AND SHALL BE WATERED AT INTERVALS DURING ESTABLISHMENT TO THE INSTALLATION OF THE PLANT MATERIAL. ENSURE ADAPTATION TO THE SITE. PRIOR TO IT TO FULLY THE CONTRACTOR SHALL FILL EACH PLANTING PIT WITH WATER AND ALLOW PERCOLATE INTO THE GROUND PRIOR TO PLACEMENT OF THE PLANT.
19. THE CONTRACTOR SHALL NOTIFY THE LANDSCAPE ARCHITECT OF ANY PERCOLATION PROBLEMS PRIOR TO INSTALLATION.
20. PREFERRED PLANTING TIME PERIODS ARE FROM SEPTEMBER 1 TO DECEMBER 20 OR MARCH 20 TO MAY 31. NO PLANTING SHALL BE EXECUTED DURING ABNORMALLY HOT WEATHER OR WHEN THE GROUND IS FROZEN.
21. THE CONTRACTOR SHALL REMOVE ALL DAMAGED BRANCHES AND NURSERY TAGS AT THE TIME OF INSTALLATION.
22. SLOW RELEASE FERTILIZER TABLETS OR PACKETS OF 20-10-5 COMPOSITION SHALL BE ADDED TO ALL PLANTING PITS AT THE FOLLOWING RATIOS: 1 PER SHRUB, 2 PER DECIDUOUS OR EVERGREEN TREES UP TO 2" IN CALIPER AND 3 FOR DECIDUOUS AND EVERGREEN TREES ABOVE 2" IN CALIPER.

PERMANENT VEGETATIVE COVER FOR SOIL STABILIZATION

SITE PREPARATION

1. GRADE AS NEEDED AND FEASIBLE TO PERMIT THE USE OF CONVENTIONAL EQUIPMENT FOR SEEDBED PREPARATION, SEEDING, MULCH APPLICATION, AND MULCH ANCHORING. ALL GRADING SHOULD BE DONE IN ACCORDANCE WITH STANDARD FOR LAND GRADING.
2. IMMEDIATELY PRIOR TO SEEDING AND TOPSOIL APPLICATION, THE SUBSOIL SHALL BE EVALUATED FOR COMPACTION IN ACCORDANCE WITH THE STANDARD FOR LAND GRADING .
3. TOPSOIL SHOULD BE HANDLED ONLY WHEN IT IS DRY ENOUGH TO WORK WITHOUT DAMAGING THE SOIL STRUCTURE. A UNIFORM APPLICATION TO A DEPTH OF 5 INCHES (UNSETTLED) IS REQUIRED ON ALL SITES. TOPSOIL SHALL BE AMENDED WITH ORGANIC MATTER, AS NEEDED, IN ACCORDANCE WITH THE STANDARD FOR TOPSOILING.
4. INSTALL NEEDED EROSION CONTROL PRACTICES OR FACILITIES SUCH AS DIVERSIONS, GRADE-STABILIZATION STRUCTURES, CHANNEL STABILIZATION MEASURES, SEDIMENT BASINS, AND WATERWAYS.

SEEDBED PREPARATION

1. UNIFORMLY APPLY GROUND LIMESTONE AND FERTILIZER TO TOPSOIL WHICH HAS BEEN SPREAD AND FIRMED, ACCORDING TO SOIL TEST RECOMMENDATIONS SUCH AS OFFERED BY RUTGERS CO-OPERATIVE EXTENSION SOIL SAMPLE MAILERS ARE AVAILABLE FROM THE LOCAL RUTGERS COOPERATIVE EXTENSION OFFICES (HTTP://NJAES.RUTGERS.EDU/COUNTY/). FERTILIZER SHALL BE APPLIED AT THE RATE OF 500 POUNDS PER ACRE OR 11 POUNDS PER 1,000 SQUARE FEET OF 10-10-10 OR EQUIVALENT WITH 50% WATER INSOLUBLE NITROGEN UNLESS A SOIL TEST INDICATES OTHERWISE AND INCORPORATED INTO THE SURFACE 4 INCHES. IF FERTILIZER IS NOT INCORPORATED, APPLY ONE-HALF THE RATE DESCRIBED ABOVE DURING SEEDBED PREPARATION AND REPEAT ANOTHER ONE-HALF RATE APPLICATION OF THE SAME FERTILIZER WITHIN 3 TO 5 WEEKS AFTER SEEDING.
2. WORK LIME AND FERTILIZER INTO THE TOPSOIL AS NEARLY AS PRACTICAL TO A DEPTH OF 4 INCHES WITH 4-1 STANDARDS FOR SOIL EROSION AND SEDIMENT CONTROL IN NEW JERSEY JANUARY 2014 A DISC, SPRING-TOOTH HARROW, OR OTHER SUITABLE EQUIPMENT. THE FINAL HARROWING OR DISKING OPERATION SHOULD BE ON THE GENERAL CONTOUR. CONTINUE TILLAGE UNTIL A REASONABLE UNIFORM SEEDBED IS PREPARED.
3. HIGH ACID PRODUCING SOIL. SOILS HAVING A PH OF 4 OR LESS OR CONTAINING IRON SULFIDE SHALL BE COVERED WITH A MINIMUM OF 12 INCHES OF SOIL HAVING A PH OF 5 OR MORE BEFORE INITIATING SEEDBED REPARATION. SEE STANDARD FOR MANAGEMENT OF HIGH ACID-PRODUCING SOILS FOR SPECIFIC REQUIREMENTS.

SEEDING

1. SELECT A MIXTURE FROM TABLE 4-3 OR USE A MIXTURE RECOMMENDED BY RUTGERS COOPERATIVE EXTENSION OR NATURAL RESOURCES CONSERVATION SERVICE WHICH IS APPROVED BY THE SOIL CONSERVATION DISTRICT. SEED GERMINATION SHALL HAVE BEEN TESTED WITHIN 12 MONTHS OF THE PLANTING DATE. NO SEED SHALL BE ACCEPTED WITH A GERMINATION TEST DATE MORE THAN 12 MONTHS OLD UNLESS RETESTED.
   1.1. SEEDING RATES SPECIFIED ARE REQUIRED WHEN A REPORT OF COMPLIANCE IS REQUESTED PRIOR TO ACTUAL ESTABLISHMENT OF PERMANENT VEGETATION. UP TO 50% REDUCTION IN RATES MAY BE USED WHEN PERMANENT VEGETATION IS ESTABLISHED PRIOR TO A REPORT OF COMPLIANCE INSPECTION. THESE RATES APPLY TO ALL METHODS OF SEEDING. ESTABLISHING PERMANENT VEGETATION MEANS 80% VEGETATIVE COVERAGE WITH THE SPECIFIED SEED MIXTURE FOR THE SEEDED AREA AND MOWED ONCE.
   1.2. WARM-SEASON MIXTURES ARE GRASSES AND LEGUMES WHICH MAXIMIZE GROWTH AT HIGH TEMPERATURES, GENERALLY 850 F AND ABOVE. SEE TABLE 4-3 MIXTURES 1 TO 7. PLANTING= RATES FOR WARM-SEASON GRASSES SHALL BE THE AMOUNT OF PURE LIVE SEED (PLS) AS DETERMINED BY GERMINATION TESTING RESULTS.
   1.3. COOL-SEASON MIXTURES ARE GRASSES AND LEGUMES WHICH MAXIMIZE GROWTH AT TEMPERATURES BELOW 85O MANY GRASSES BECOME ACTIVE AT 65O SEE TABLE 4-3, MIXTURES 8-20. ADJUSTMENT OF PLANTING RATES TO COMPENSATE FOR THE AMOUNT OF PLS IS NOT REQUIRED FOR COOL SEASON GRASSES.
2. CONVENTIONAL SEEDING IS PERFORMED BY APPLYING SEED UNIFORMLY BY HAND, CYCLONE (CENTRIFUGAL) SEEDER, DROP SEEDER, DRILL OR CULTIPACKER SEEDER. EXCEPT FOR DRILLED, HYDROSEEDED OR CULTIPACKED SEEDINGS, SEED SHALL BE INCORPORATED INTO THE SOIL WITHIN 24 HOURS OF SEEDBED PREPARATION TO A DEPTH OF 1/4 TO 1/2 INCH, BY RAKING OR DRAGGING. DEPTH OF SEED PLACEMENT MAY BE 1/4 INCH DEEPER ON COARSE-TEXTURED SOIL.
3. AFTER SEEDING, FIRMING THE SOIL WITH A CORRUGATED ROLLER WILL ASSURE GOOD SEED-TO-SOIL CONTACT, RESTORE CAPILLARITY, AND IMPROVE SEEDLING EMERGENCE. THIS IS THE PREFERRED METHOD. WHEN PERFORMED ON THE CONTOUR, SHEET EROSION WILL BE MINIMIZED AND WATER CONSERVATION ON SITE WILL BE MAXIMIZED.
4. HYDROSEEDING IS A BROADCAST SEEDING METHOD USUALLY INVOLVING A TRUCK, OR TRAILER-MOUNTED TANK, WITH AN AGITATION SYSTEM AND HYDRAULIC PUMP FOR MIXING SEED, WATER AND FERTILIZER AND SPRAYING THE MIX ONTO THE PREPARED SEEDBED. MULCH SHALL NOT BE INCLUDED IN THE TANK WITH SEED. SHORTFIBERED MULCH MAY BE APPLIED WITH A HYDROSEEDER FOLLOWING SEEDING. (ALSO SEE SECTION 4-MULCHING BELOW). HYDROSEEDING IS NOT A PREFERRED SEEDING METHOD BECAUSE SEED AND FERTILIZER ARE APPLIED TO THE SURFACE AND NOT INCORPORATED INTO THE SOIL. WHEN POOR SEED TO SOIL CONTACT OCCURS, THERE IS A REDUCED SEED GERMINATION AND GROWTH.

STANDARD ROOT BALL SIZES FOR NURSERY-GROWN SHADE TREES

CALIPER* (IN.)	HEIGHT RANGE (FT-IN.)	MAX. HEIGHT (FT)	MIN. BALL DIA. (IN.)	MIN. BALL DEPTH (IN.)
½	5-6	8	12	9
¾	6-8	10	14	10½
1	8-10	11	16	12
1¼	8-10	12	18	13½
1½	10-12	14	20	13½
1¾	10-12	14	22	14½
2	12-14	16	24	16
2½	12-14	16	28	18½
3	14-16	18	32	19½
3½	14-16	18	38	23
4	16-18	22	42	25
5	18-20	26	54	32

* UP TO AND INCLUDING THE 4-IN. CALIPER SIZE, THE CALIPER MEASUREMENT INDICATES THE DIAMETER OF THE TRUNK 6 IN. ABOVE GROUND LEVEL. FOR LARGER SIZES, THE CALIPER MEASUREMENT IS TAKEN 12 IN. ABOVE GROUND LEVEL.

NOTES:

1. SEE AMERICAN STANDARD FOR NURSERY STOCK, ANSI Z60.1, FOR COMPLETE LIST OF NURSERY STANDARDS FOR OTHER TYPES AND SIZES OF TREES AND SHRUBS.
2. SEE INTERNATIONAL SOCIETY OF ARCHITECTURE'S "PRINCIPLES AND PRACTICES OF PLANTING TREES AND SHRUBS." 1997

SOIL IMPROVEMENT

THE QUALITY OF SOIL AVAILABLE FOR PLANTING VARIES WIDELY FROM SITE TO SITE, ESPECIALLY AFTER CONSTRUCTION ACTIVITY HAS OCCURRED. THE NATURE OF CONSTRUCTION RESULTS IN COMPACTION, FILLING, CONTAMINATION, AND GRADING OF THE ORIGINAL SOIL ON A SITE, RAPIDLY MAKING IT USELESS FOR PLANTING. PREVIOUS HUMAN ACTIVITY AT A SITE CAN ALSO AFFECT THE ABILITY OF THE SOIL TO SUPPORT PLANTS.

DURING THE DESIGN PHASE, ASSUMPTIONS MUST BE MADE REGARDING THE PROBABLE CONDITION OF THE SOIL AFTER CONSTRUCTION IS COMPLETE. THE HEALTH OF EXISTING OR REMAINING SOIL DETERMINES WHAT TYPES OF SOIL PREPARATION WILL BE REQUIRED AND THE VOLUME OF SOIL TO BE PREPARED. CONDITIONS WILL VARY FROM LOCATION TO LOCATION WITHIN A PROJECT, AND DETAILS MUST BE CONDITION-SPECIFIC. FOR LARGE PROJECTS OR EXTREME CONDITIONS, IT IS USEFUL TO CONSULT AN EXPERT EXPERIENCED IN MODIFYING PLANTING SOILS AT URBAN SITES.

NOTES:

1. IF SITE OR DESIGN CONSTRAINTS PROHIBIT USE OF THE DIMENSIONS SHOWN IN THE PLANTING DETAILS, FOLLOW THE GUIDELINES FOR PLANTING IN URBAN AREAS.
2. WHENEVER POSSIBLE THE SOIL IMPROVEMENT AREA SHOULD BE CONNECTED FROM TREE TO TREE.
3. ALWAYS TEST SOIL FOR PH AND NUTRIENT LEVELS AND ADJUST THESE AS REQUIRED.
4. LOOSEN SOIL WITH A BACKHOE OR OTHER LARGE COARSE-TILING EQUIPMENT WHEN POSSIBLE. TILING THAT PRODUCES LARGE, COARSE CHUNKS OF SOIL IS PREFERABLE TO TILING THAT RESULTS IN FINE GRAINS UNIFORM IN TEXTURE.
5. THE BOTTOM OF PLANTING SOIL EXCAVATIONS SHOULD BE ROUGH TO AVOID MATTING OF SOIL LAYERS AS NEW SOIL IS ADDED. IT IS PREFERABLE TO FILL THE FIRST LIFT (2 TO 3 IN.) OF PLANTING SOIL INTO THE SUBSOIL.

PERMANENT VEGETATIVE MIXTURES, PLANTING RATES AND PLANTING DATES

SEED MIXTURE	PLANTING RATES		PLANTING DATES: O - OPTIMAL PLANTING PERIOD, A - ACCEPTABLE PLANTING PERIOD; PLANT HARDINESS ZONE									MAINTENANCE LEVEL	REMARKS
			ZONE 5B, 6A			ZONE 6B			ZONE 7A, 7B				
	LBS/ ACRE	LBS/1000 SQ.FT.	3/15 -5/31	6/1 -7/31	8/1 -10/1	3/1 -4/30	5/1 -8/14	8/15 -10/15	2/1 -4/30	5/1 -8/14	8/15 -10/30		
WARM SEASON MIXTURE #4													
SWITCHGRASS	10	.25	O			O			O			C-D	NATIVE WARM SEASON MIXTURE
BIG BLUESTEM	5	.10											
LITTLE BLUESTEM	5	.10											
SAND LOVEGRASS	4	.10											
COSTAL PANICGRASS	10	.20											
COOL SEASON MIXTURE #7													
STRONG CREEPING RED FESCUE	130	3	A	A	O	A	A	O	A	A	O	B-D	SUITABLE WATERWAY MIX. CANADA BLUEGRASS MORE DROUGHT TOLERANT. USE REDTOP FOR INCREASED DROUGHT TOLERANCE
KENTUCKY BLUEGRASS	50	1											
PERENNIAL RYEGRASS OR	20	.60											
REDTOP	10	.25											
PLUS WHITE CLOVER	5	.10											

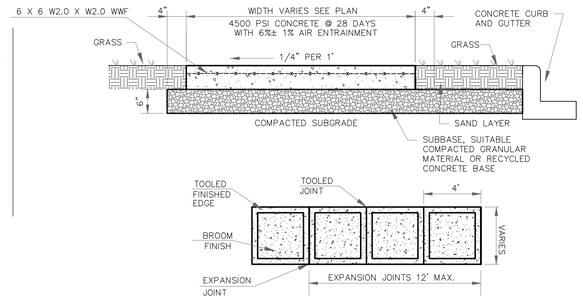

1. ANY CONCRETE PLACED BETWEEN NOVEMBER 15 AND APRIL 1 MUST CONFORM TO ARTICLES 501.11 AND 501.17 OF THE N.J.D.O.T. STANDARD SPECIFICATIONS FOR ROAD AND BRIDGE CONSTRUCTION, 1989 EDITION, USING 2% CALCIUM CHLORIDE, HOT WATER, COVERED W/SALT HAY.
2. WHERE SIDEWALK ABUTS CURBING, INSTALL EXPANSION JOINT BETWEEN CURB AND SIDEWALK ALONG ENTIRE LENGTH.
3. SLUMP TEST: 3"– 4".
4. EXPANSION JOINTS EVERY 12', CONSTRUCTION JOINTS EVERY 4' AT A DEPTH OF 1/4 THICKNESS OF CONCRETE.
5. ALL SIDEWALK MUST BE SPRAYED WITH WHITE PIGMENTED CURING COMPOUND AFTER BROOM FINISHING.

2 / SP-111 **SIDEWALK**

SCALE: N.T.S.

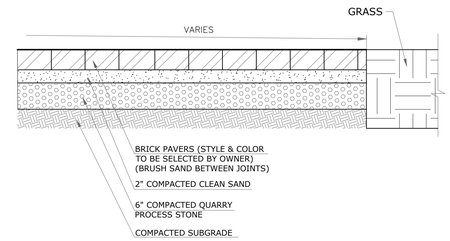

3 / SP-111 **BRICK PAVER**

SCALE: N.T.S.

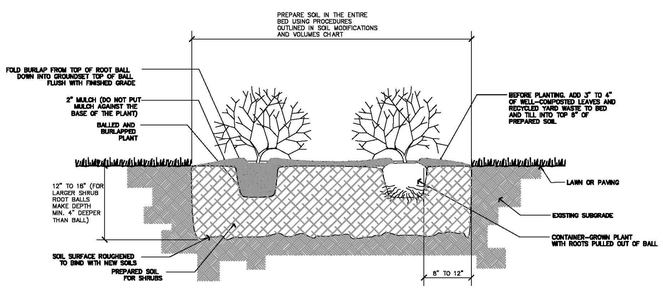

NOTES:

1. FOR CONTAINER-GROWN SHRUBS, USE FINGERS OR SMALL HAND TOOLS TO PULL THE ROOTS OUT OF THE OUTER LAYER OF POTTING SOIL; THEN CUT OR PULL APART ANY ROOTS THAT CIRCLE THE PERIMETER OF THE CONTAINER.
2. INCORPORATE COMMERCIALLY PREPARED MYCORRHIZAE SPORES IN THE SOIL IMMEDIATELY AROUND THE ROOT BALL AT RATES SPECIFIED BY THE MANUFACTURER.
3. CONFIRM THAT WATER DRAINS OUT OF THE SOIL DURING THE DESIGN PHASE; DESIGN ALTERNATIVE DRAINAGE SYSTEMS AS REQUIRED.
4. CONFIRM THAT THE SOIL ON TOP OF THE ROOT BALL IS AT THE ORIGINAL GRADE IN WHICH THE PLANT WAS ORIGINALLY PLANTED. REMOVE ALL SOIL ABOVE THE TRUNK FLARE.

1 / SP-111 **SHRUB PLANTING DETAIL**

SCALE: N.T.S.

SCHEDULE OF REVISIONS

REV.	DATE	DESCRIPTION OF CHANGES	DRAWN BY	CHK. BY

OWNER
SETON HALL PREPARATORY SCHOOL
120 NORTHFIELD AVENUE
TOWNSHIP OF WEST ORANGE, NJ 07052

APPLICANT
SETON HALL PREPARATORY SCHOOL
120 NORTHFIELD AVENUE
TOWNSHIP OF WEST ORANGE, NJ 07052

E 2 PROJECT MANAGEMENT LLC

87 HIBERNIA AVENUE
ROCKAWAY, N.J. 07866
PHONE: (973) 299-5200
FAX: (973) 299-5059
www.E2PM.com

THIS DRAWING DOES NOT INCLUDE NECESSARY COMPONENTS FOR CONSTRUCTION SAFETY. ALL CONSTRUCTION MUST BE DONE IN COMPLIANCE WITH THE OCCUPATIONAL SAFETY AND HEALTH ACT OF 1970 AND ALL RULES AND REGULATIONS THERETO APPURTENANT. THIS DRAWING AND THE DESIGN FEATURES OR CONSTRUCTION DISCLOSED ARE PROPRIETARY TO E2 PROJECT MANAGEMENT, LLC AND SHALL NOT BE REPRODUCED, ALTERED OR COPIED WITHOUT WRITTEN PERMISSION, SHALL NOT BE USED IN ANY MANNER DETRIMENTAL TO ITS INTEREST AND SHALL BE RETURNED UPON REQUEST.

N.J. ENGINEERING CERTIFICATE OF AUTHORIZATION No. 24GA28118200

I CERTIFY THAT THESE PLANS HAVE BEEN PREPARED UNDER MY SUPERVISION

STATE OF NEW JERSEY · CHARLES J. STEWART · No. GB35884 · LICENSED · PROFESSIONAL ENGINEER & LAND SURVEYOR

Digitally signed by Charles Stewart
Date: 2023.09.07 10:38:54 -04'00'

CHARLES J. STEWART, P.E., P.L.S.
NJ REGISTERED PROFESSIONAL ENGINEER LICENSE AND
NJ PROFESSIONAL LAND SURVEYOR LICENSE NO. 24GB035884

PROJECT NAME

SETON HALL PREPARATORY SCHOOL
PROPOSED DIGITAL LAB AND ENTRY

120 NORTHFIELD AVENUE
TOWNSHIP OF WEST ORANGE
ESSEX COUNTY, NEW JERSEY
TAX BLOCK 59.04, LOT 1.01

DRAWING TITLE

CONSTRUCTION DETAILS

CHECKED BY: CJS	DRAWN BY: ENS
SCALE: NOT TO SCALE	SHEET NO:
PROJECT #: P-22-70-01	FIRST ISSUE: 9/06/2023

DRAWING NO.

SP-111.00